Developer: rhutch@mst.edu

NX 7.5

Lesson 4 - Assemblies

Pre-reqs/Technical Skills

- Basic computer use
- Completion of NX 7.5 Lessons 1,2, and 3

Expectations

- Read lesson material
- Implement steps in software while reading through lesson material
- Complete quiz on Blackboard
- Submit completed assignment on Blackboard
- Attend help sessions as necessary
- Post comments on lesson web page

Objectives/Measurables

- Learn the basics of using NX to create constrained assemblies of parts, measured via assignment score
- Learn various features in NX, measured via Blackboard quiz score

Lecture Topics

- Creating an Assembly
- Adding Parts and Constraints
- Moving Constrained Parts

Table of Contents

NX 7.5 1
Lesson 4 - Assemblies 1
Pre-reqs/Technical Skills 1
Expectations 1
Objectives/Measurables 1
Lecture Topics 1
Introduction – NX 1
Assemblies 1
Creating an Assembly 2
Changing Constraints 15
Moving Components 22
Assignment 25

Introduction – NX

NX is a premier 3D computer aided design suite. It allows you to model solid components and assemblies, to perform engineering analyses such as mechanism simulation and stress analysis, to create tool paths for computer-based manufacturing processes and to perform numerous other engineering design activities in a single software environment. Software suites like NX are referred to as product lifecycle management (PLM) tools since they are generally integrated in the product design process from start to finish. The IDE20 tutorials for NX will focus on basic 3D drafting and component modeling.

Assemblies

An important aspect of using NX is working with assemblies. In prior tutorials, individual parts were created. Assemblies are groups of parts and can be made by adding existing parts or creating new ones. The parts in an

Copyright 2010, Missouri S&T

assembly can be constrained relative to each other to create functional mechanisms and to allow dimensional changes to propagate through an assembly. In this tutorial, a simple rotating assembly will be created from existing parts. Constraints will be added to the parts to allow them to move as if they were physically connected.

Creating an Assembly

Download the RotatingParts.zip file from the tutorial web page and unzip it in a convenient working directory. You should see the parts shown in Figure 1.

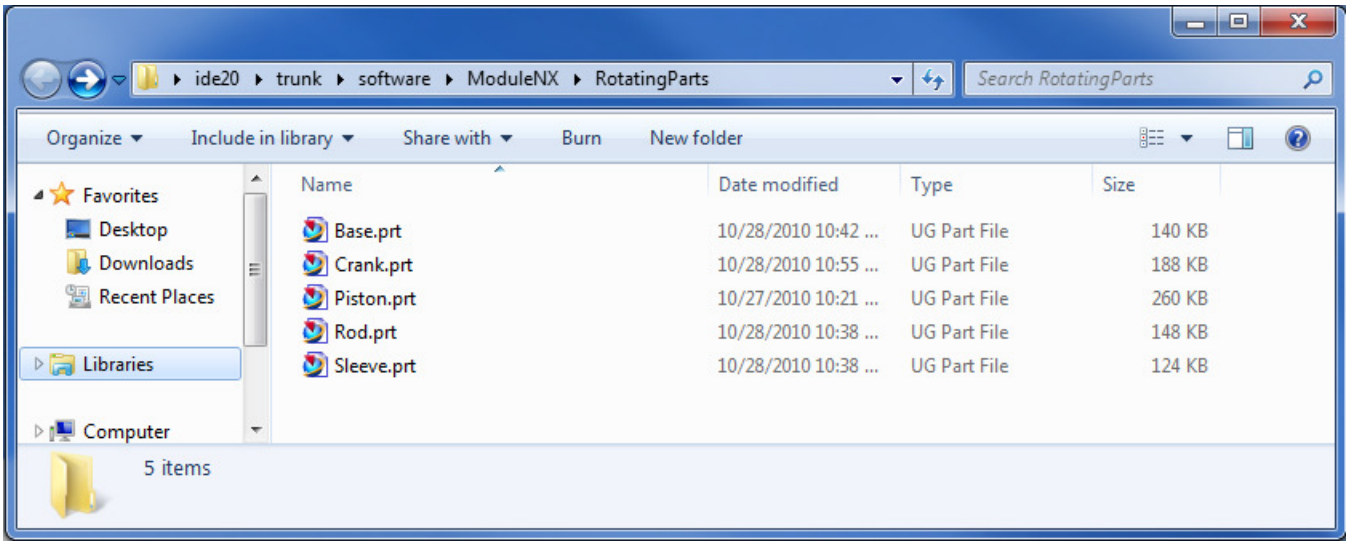

Figure 1 - Part Files

Look though each part. The first part, Base.prt, is shown in Figure 2. This part will be fixed and used as the base for defining the location of all of the other parts.

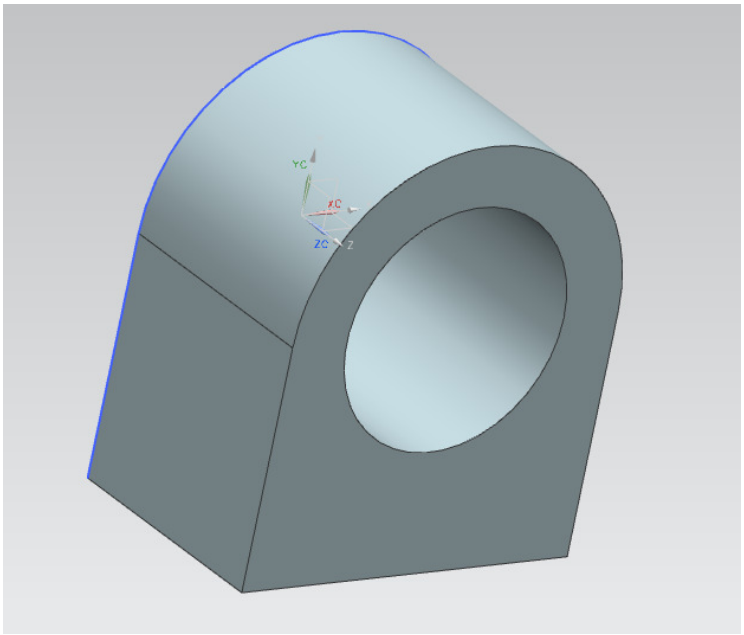

Figure 2 - Base

Copyright 2010, Missouri S&T

The next part, Crank.prt, is a simple crankshaft (Figure 3) and will be placed and rotated relative to the base.

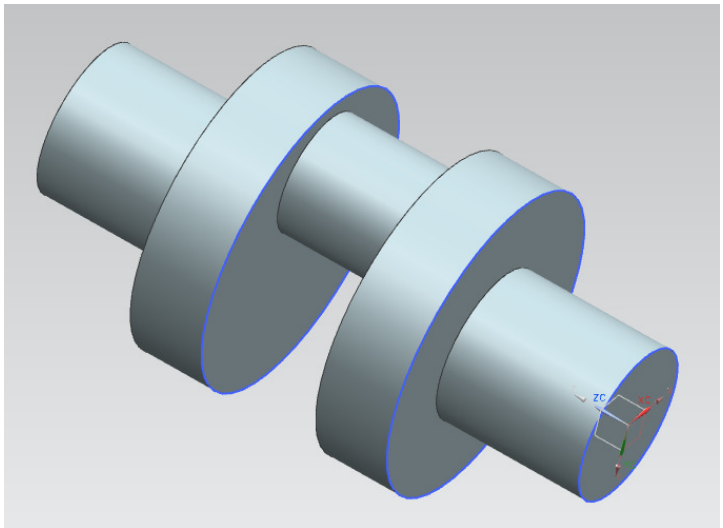

Figure 3 - Crank

Open Rod.prt next. This part is a connecting link (Figure 4) that will be constrained to rotate about the offset portion of the crank.

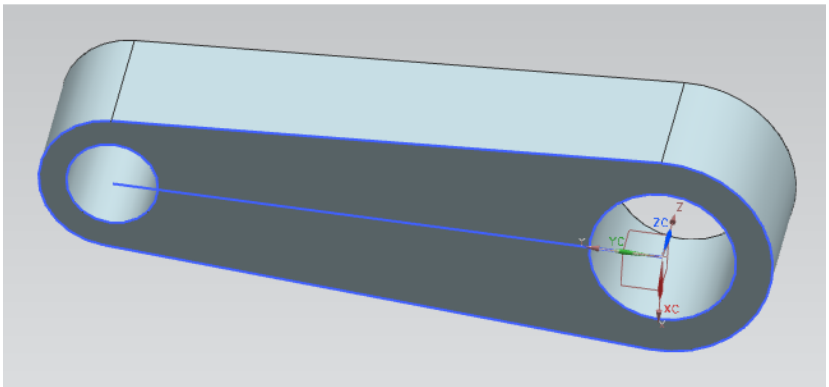

Figure 4 - Rod

The rod will connect the crank and the next part to open, Piston.prt. This part is a simple piston (Figure 5) that will be constrained to rotate about the smaller radius hole in the rod.

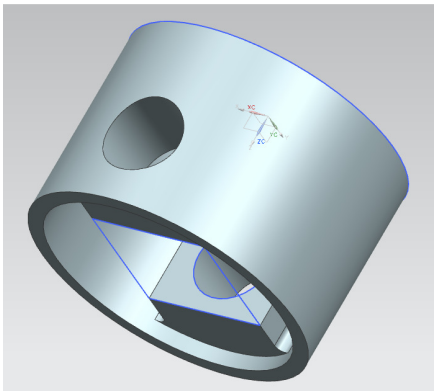

Figure 5 - Piston

Copyright 2010, Missouri S&T

Finally, open Sleeve.prt. This part is a sleeve (Figure 6) that will be used to guide the motion of the piston as it travels up and down.

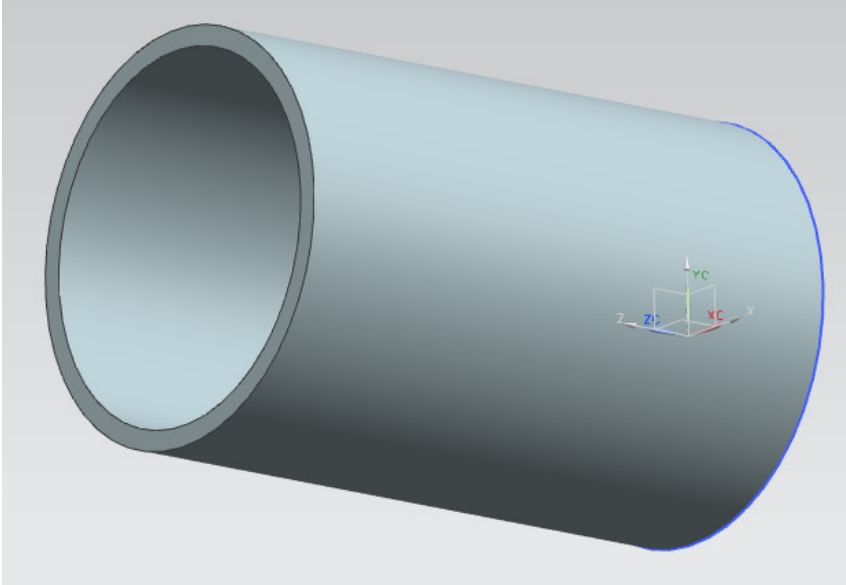

Figure 6 - Sleeve

Look through the Part Navigator for each of these parts to see how they are drawn. You should be able to reproduce each of them using what you have learned from previous tutorials (it is not necessary for this tutorial though).

To begin the assembly of these components, first close any parts you have open (Figure 7).

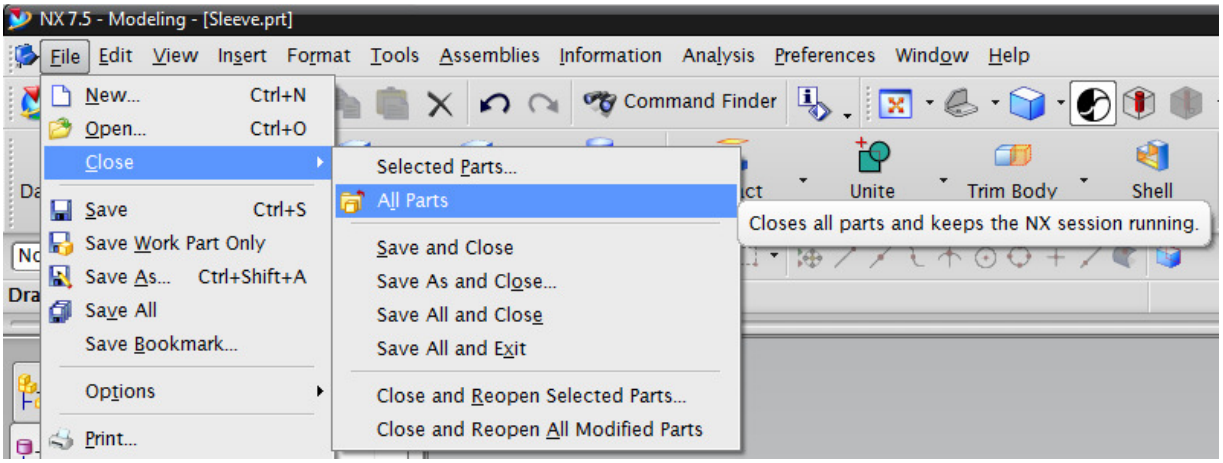

Figure 7 - Closing All Parts

Start a New file. Select Assembly from the Templates list. Set the Folder to the directory where you unzipped the part files. Set the name to Rotation.prt as shown in Figure 8.

Copyright 2010, Missouri S&T

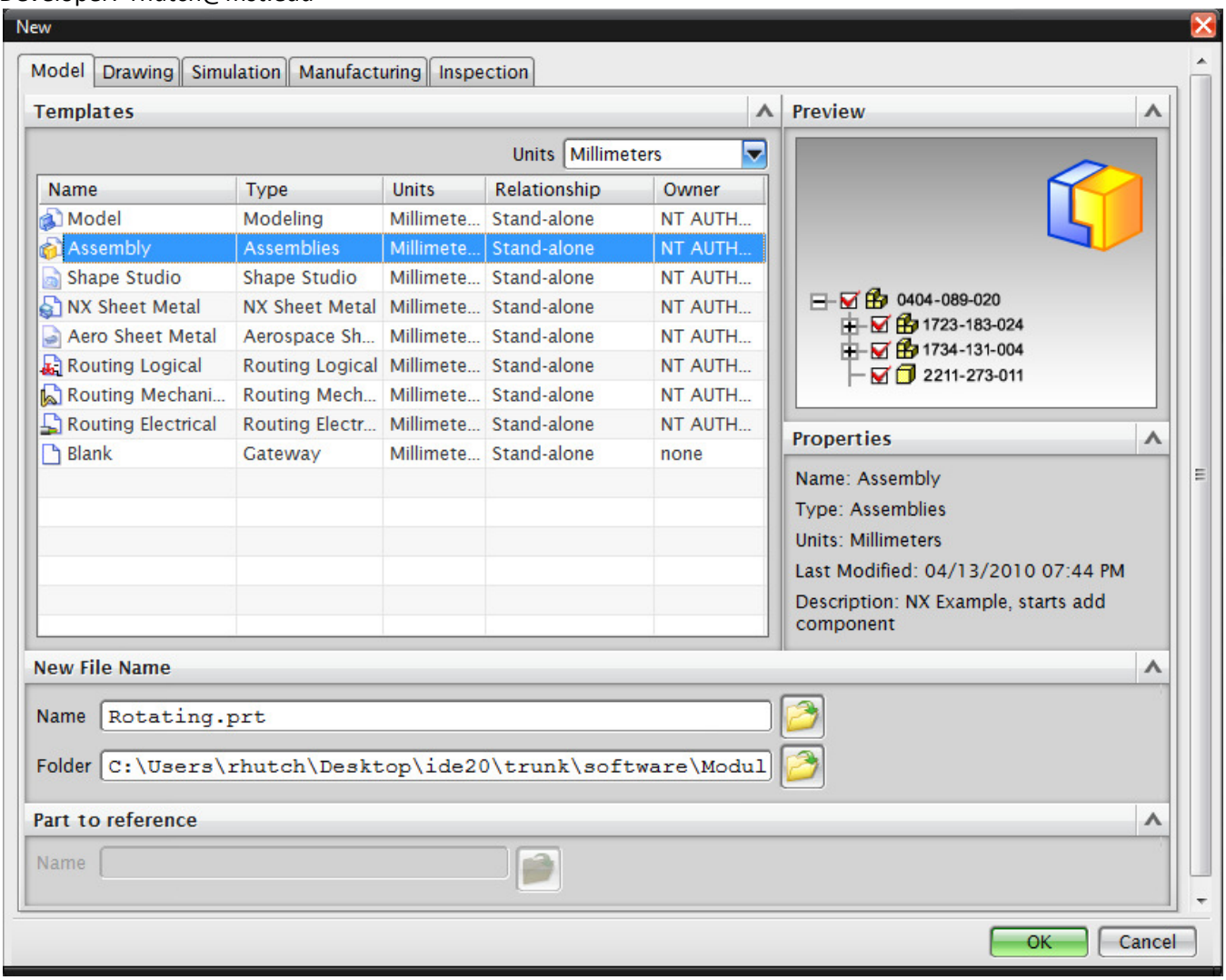

Figure 8 - New Assembly

Depending on how you started the new assembly, you may need to change the user interface mode. If your user interface looks like Figure 9 select More from the Window option in the menu.

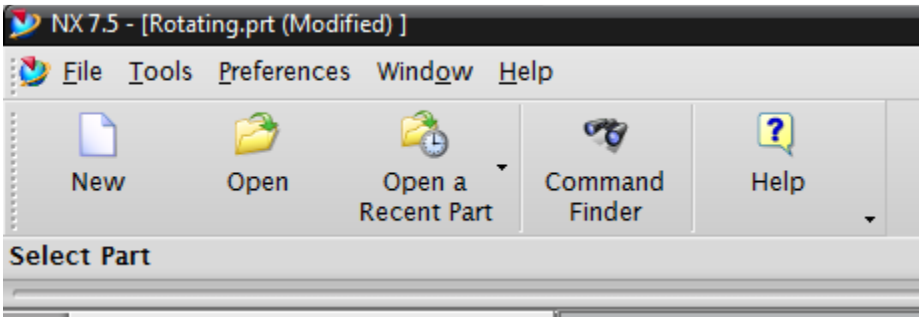

Figure 9 - Simple Menu

A Change Window dialog will open (Figure 10), just close this out. The user interface should be updated with the buttons you will need for this tutorial (Figure 11).

Copyright 2010, Missouri S&T

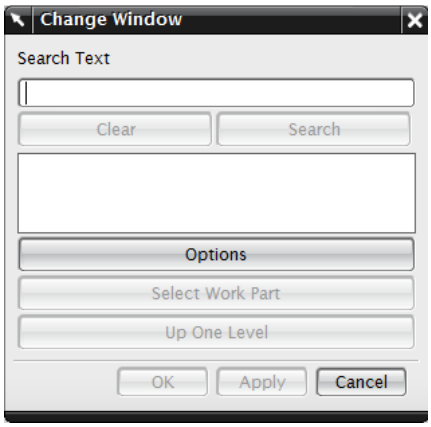

Figure 10 - Change Window Dialog

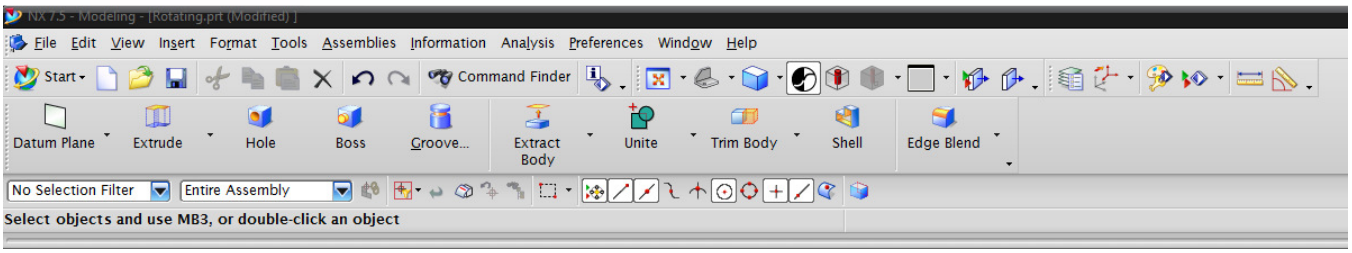

Figure 11 - Full Menu

Now that the user interface is setup, we can start adding parts. Click Add Component, under the Components option under Assemblies in the menu (Figure 12).

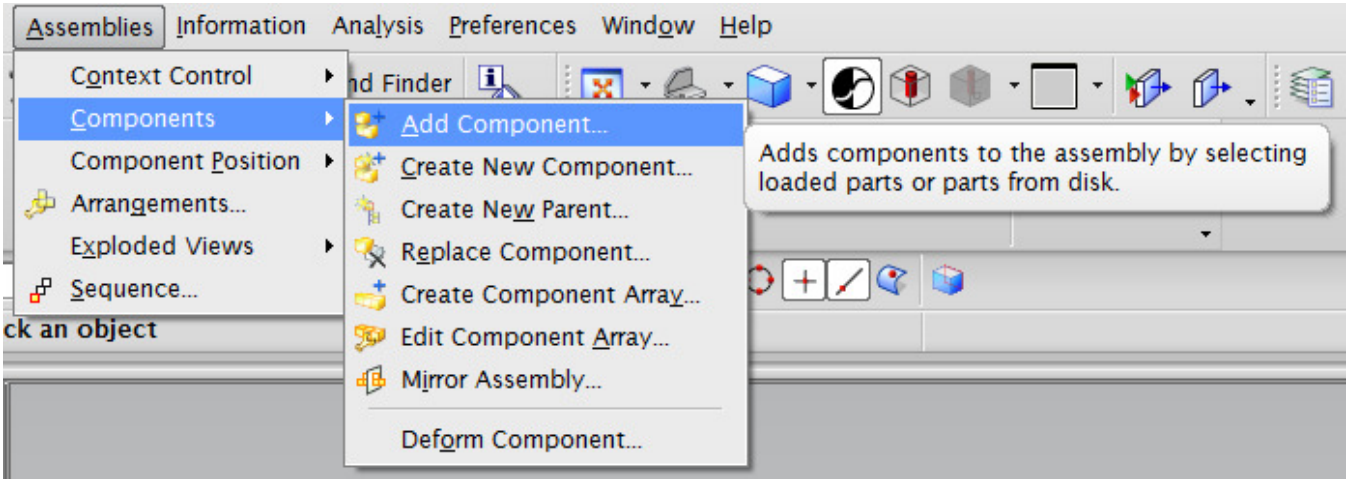

Figure 12 - Adding a Component

Copyright 2010, Missouri S&T

To dialog shown in Figure 13 will open. Click the Open button to open an existing file.

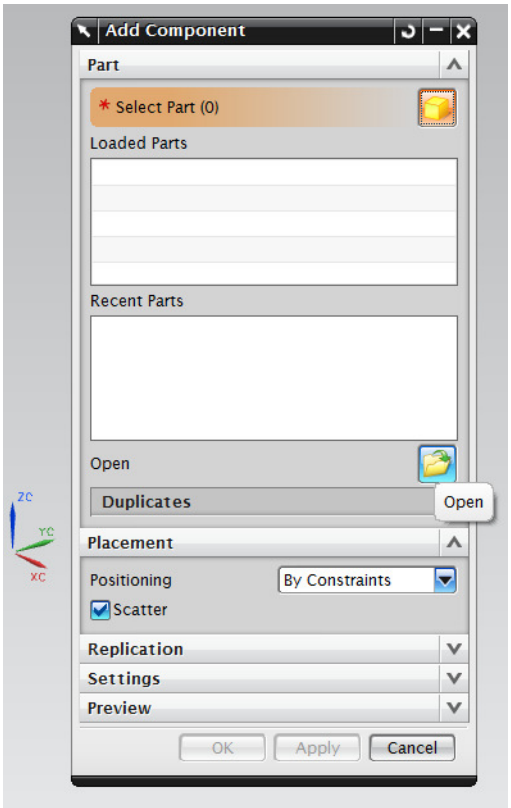

Figure 13 - Add Component Dialog

The Part Name dialog shown in Figure 14 will appear. Select the Base.prt file and click OK.

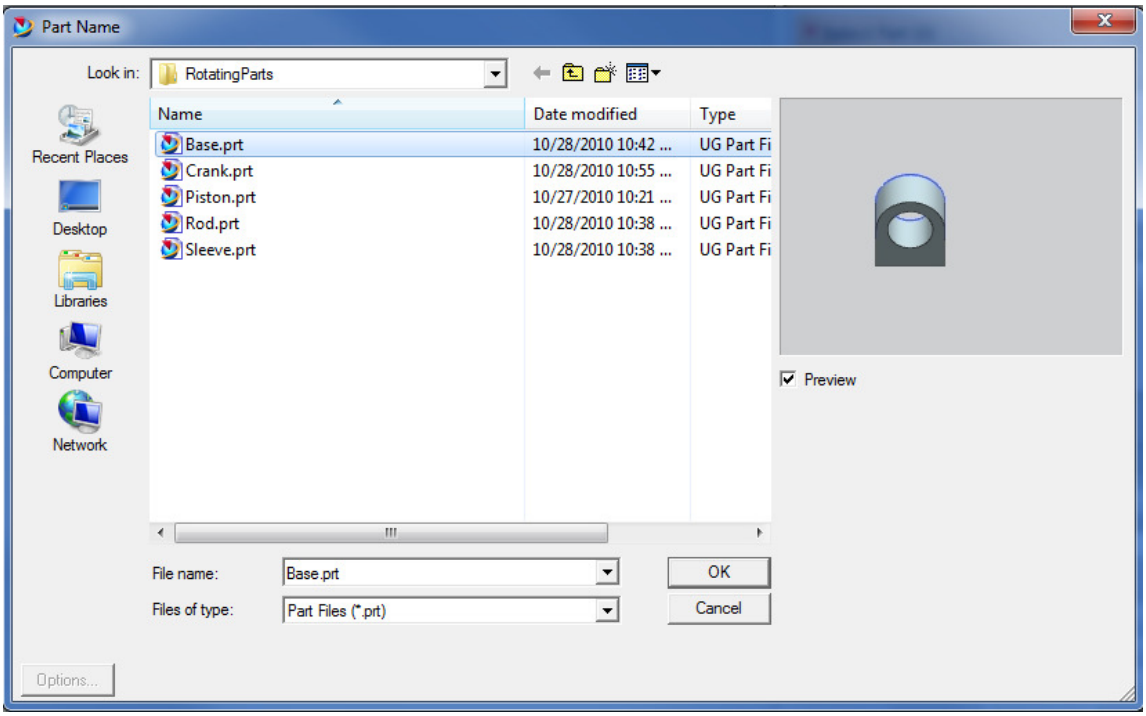

Figure 14 - Adding a Part

Copyright 2010, Missouri S&T

You will be returned to the Add Component dialog (Figure 15). Under the Placement group, select Absolute Origin under Positioning. This will place the origin of the part at the origin of the assembly. Note that a part preview will appear by default. Click Apply to add the part.

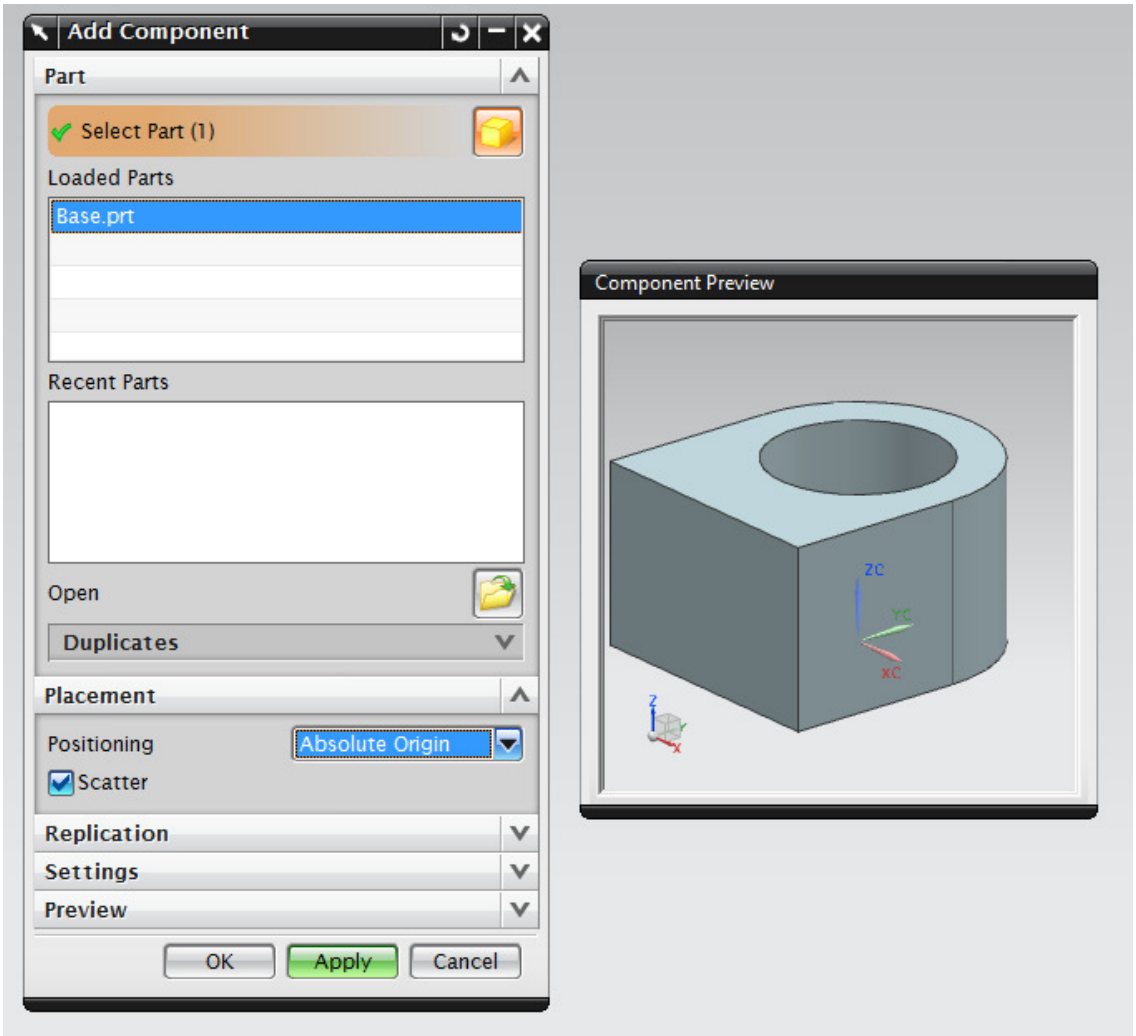

Figure 15 - Placing the Base

You will be returned to the Add Component dialog. Click Open and open the Crank.prt file as you opened the Base.prt file. When you are returned to the Add Component dialog it should look like Figure 16. Select By Constraints for Positioning. This will allow us to constrain the crank to the already placed base. Click Apply to move on.

Copyright 2010, Missouri S&T

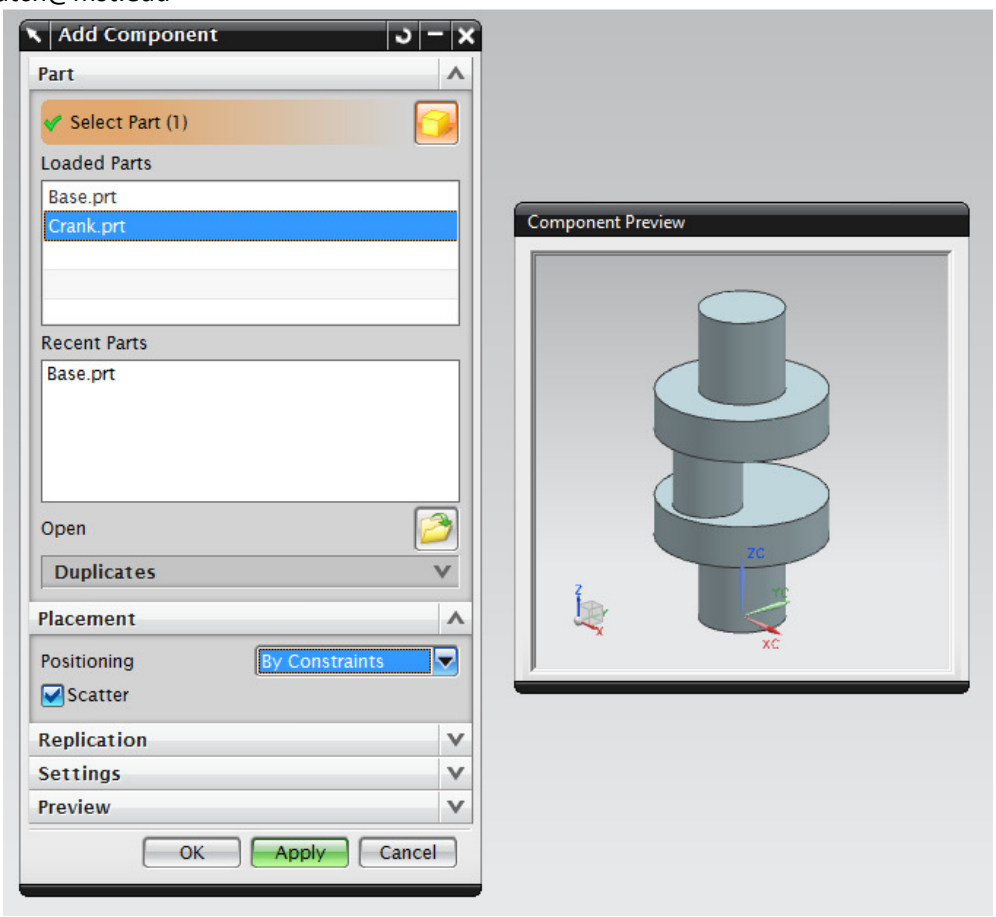

Figure 16 - Adding the Crank

The Assembly Constraints dialog will open (Figure 17). Select Concentric from the Type list. This will allow us to constrain circles on two parts to be concentric.

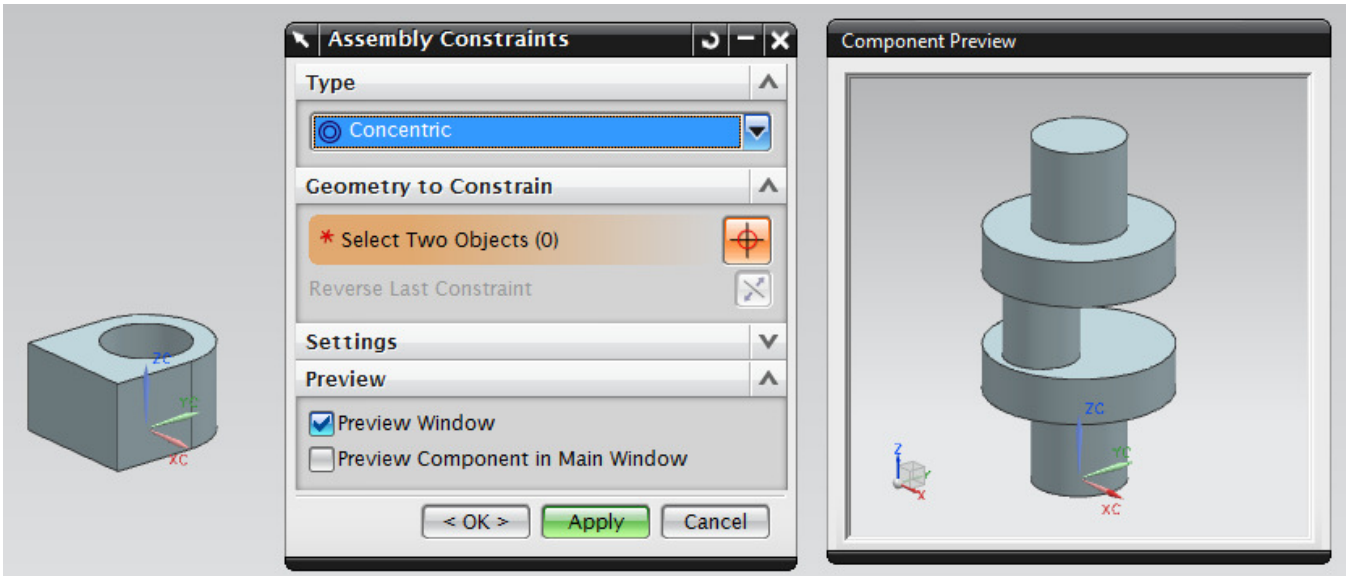

Figure 17 - Constraining the Crank

Copyright 2010, Missouri S&T

You will need to select two circular edges. The first should be the highlighted edge shown in the preview window in Figure 18.

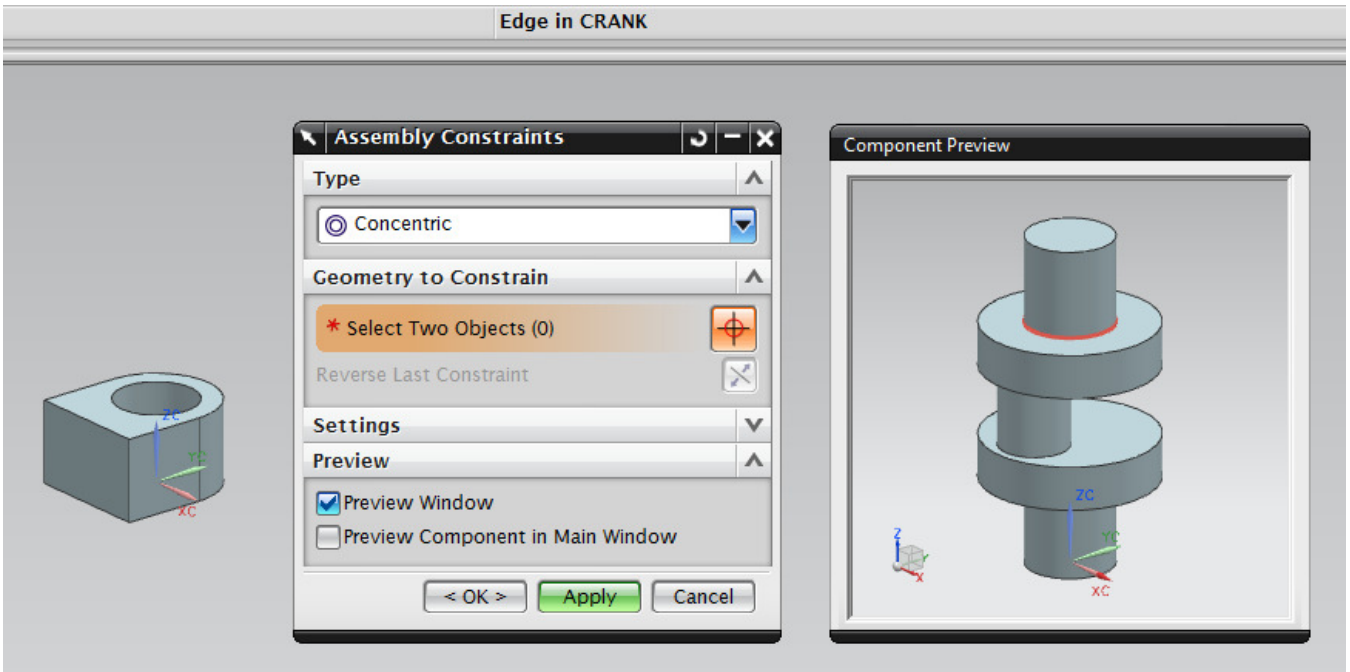

Figure 18 - The First Edge

The next should be the highlighted edge of the base shown in Figure 19.

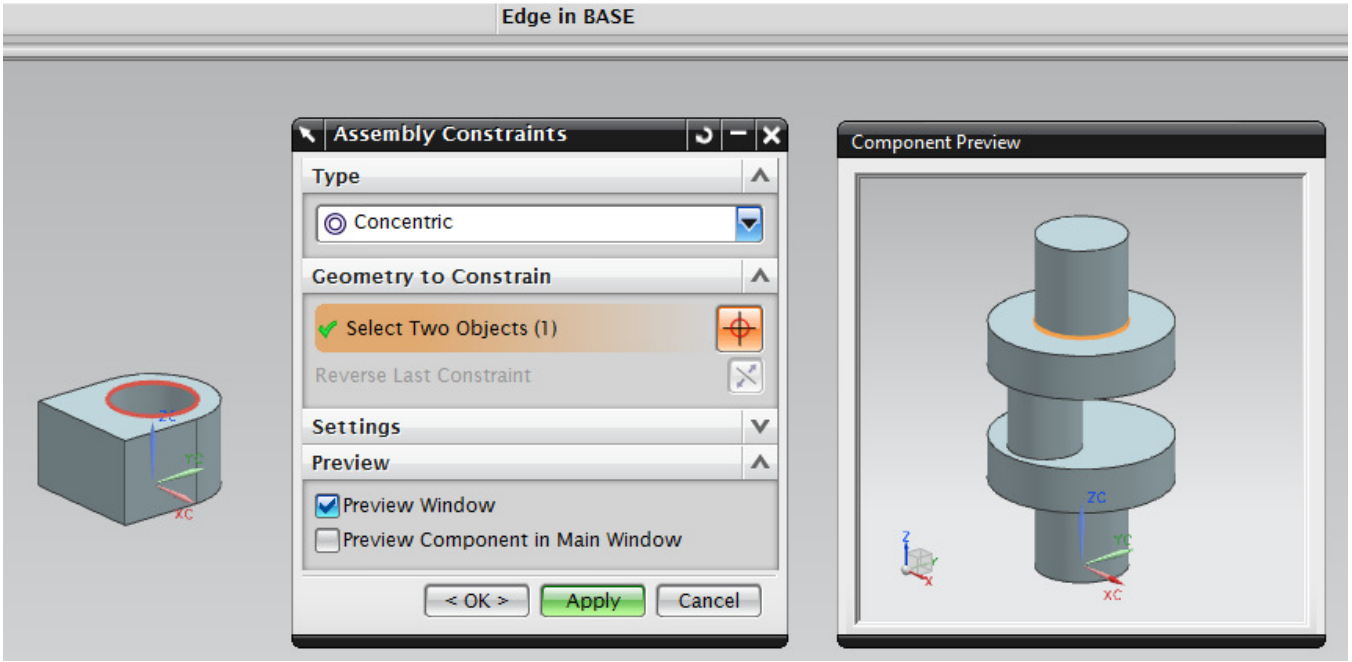

Figure 19 - The Second Edge

Copyright 2010, Missouri S&T

To see how the parts will fit together, check Preview Component in Main Window as shown in Figure 20. Notice that the constraint is applied but the crank needs to be flipped.

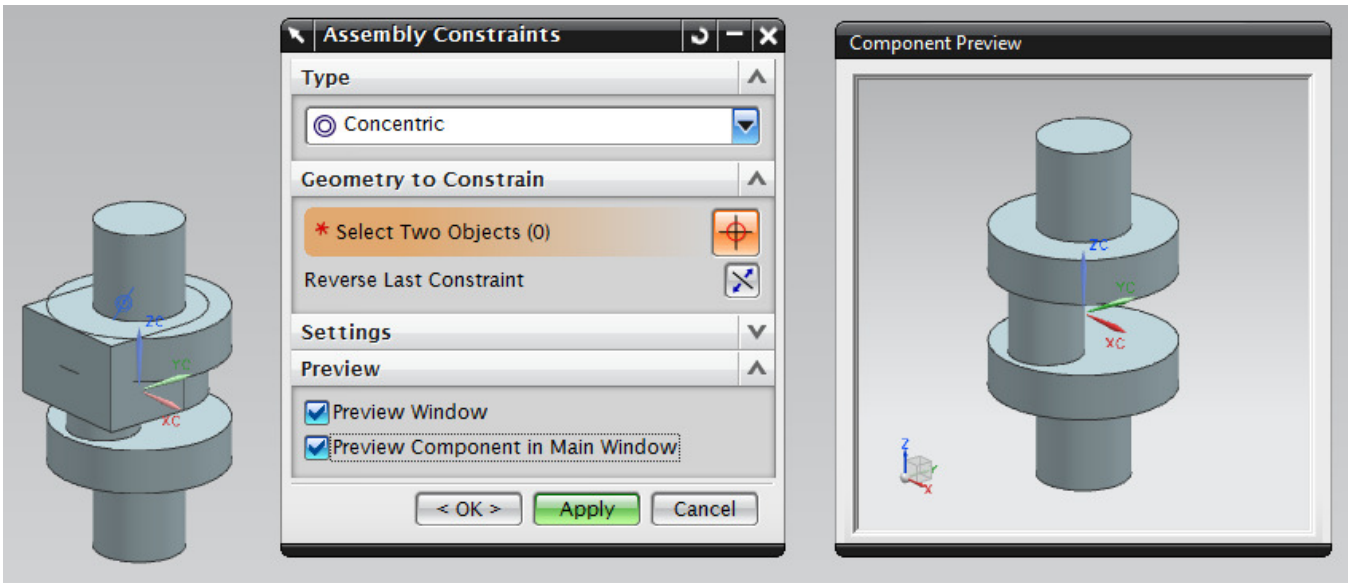

Figure 20 - The Added Constraint

Select the Reverse Last Constraint button to flip the crank (Figure 21).

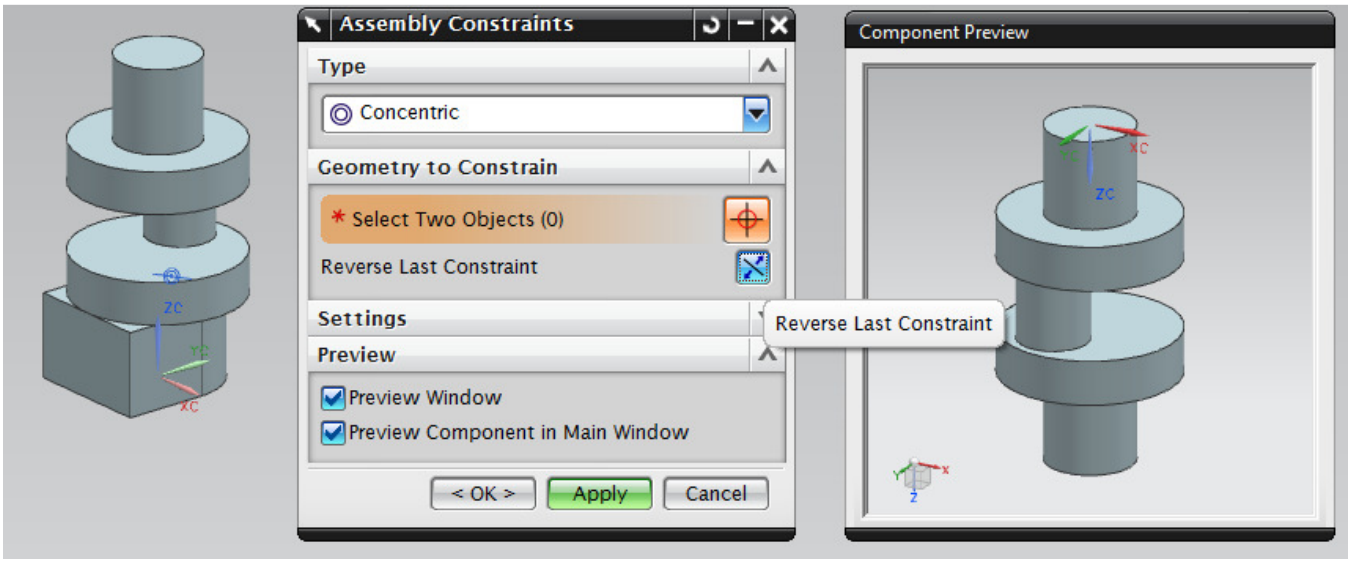

Figure 21 - Flipping the Constraint

Click OK to close the constraints dialog and return to the Add Components dialog. Add the Rod.prt file using the same approach. Use a concentric constraint between the edge highlighted on the rod in the preview in Figure 22 (select the larger diameter circle) and the edge highlighted on the crank in Figure 23. Flip the constraint if necessary.

Copyright 2010, Missouri S&T

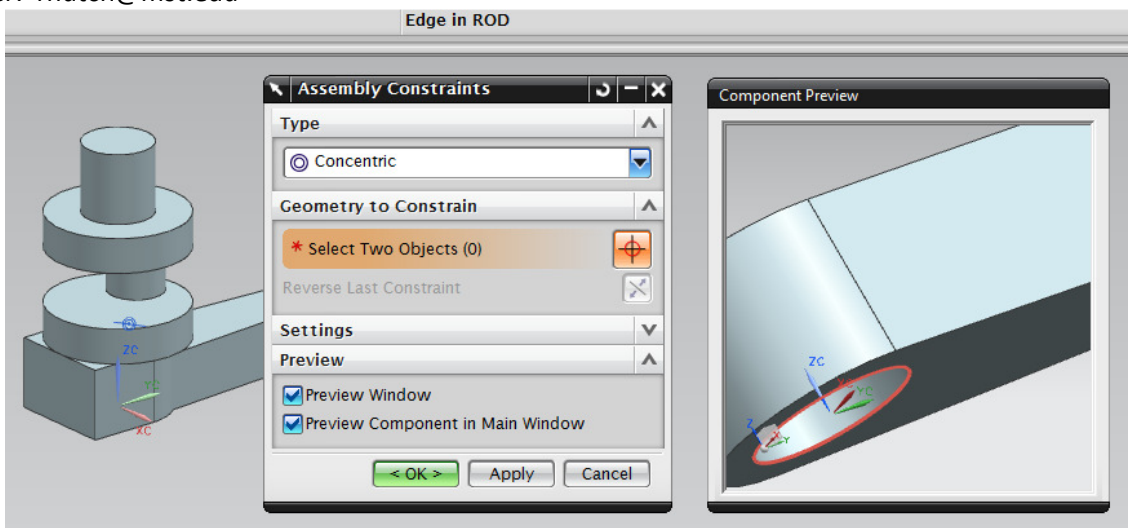

Figure 22 - The First Edge (Rod)

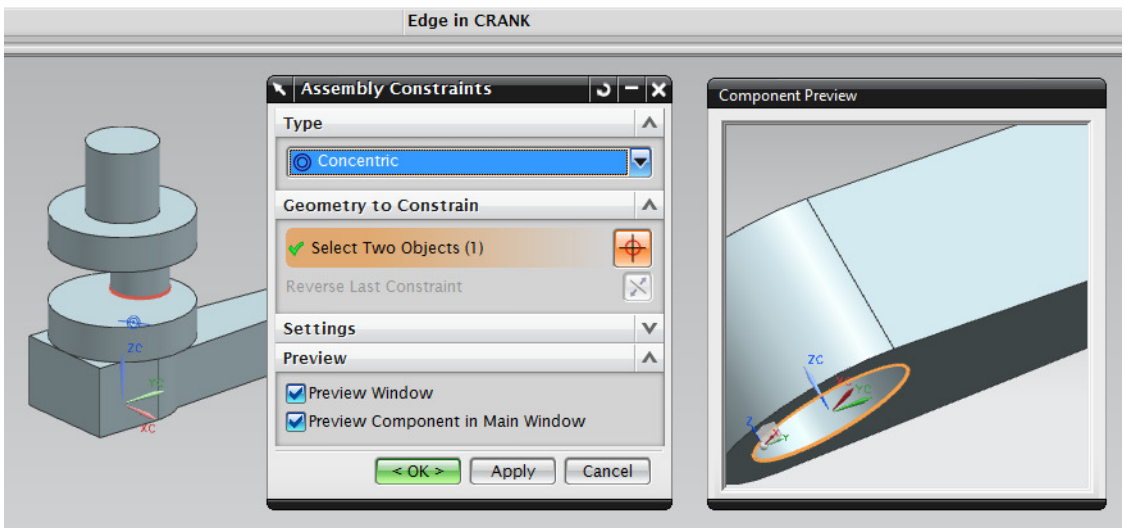

Figure 23 - The Second Edge (Crank)

The assembly should look like Figure 24.

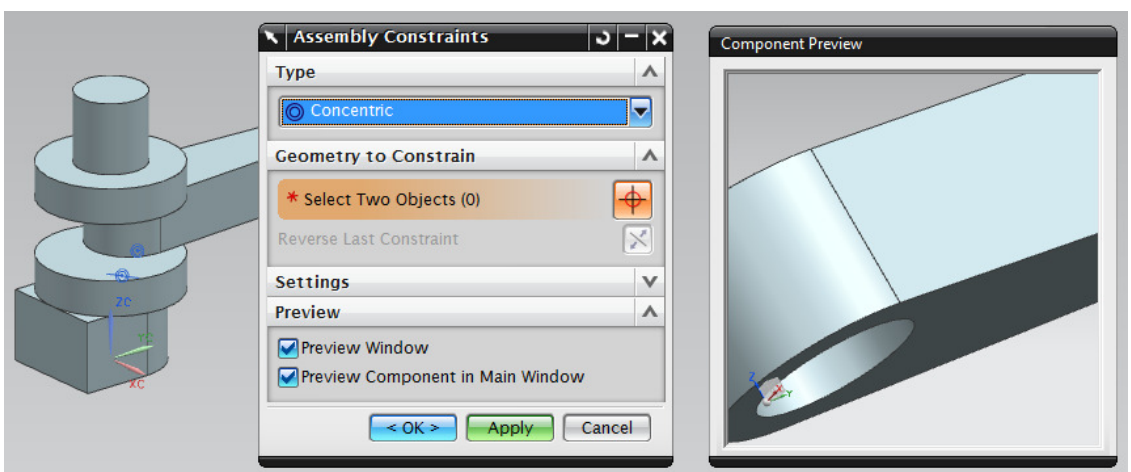

Figure 24 - The Rod Added

Copyright 2010, Missouri S&T

Click OK and add the Piston.prt file. Apply a concentric constraint between the edges shown in Figure 25 and Figure 26.

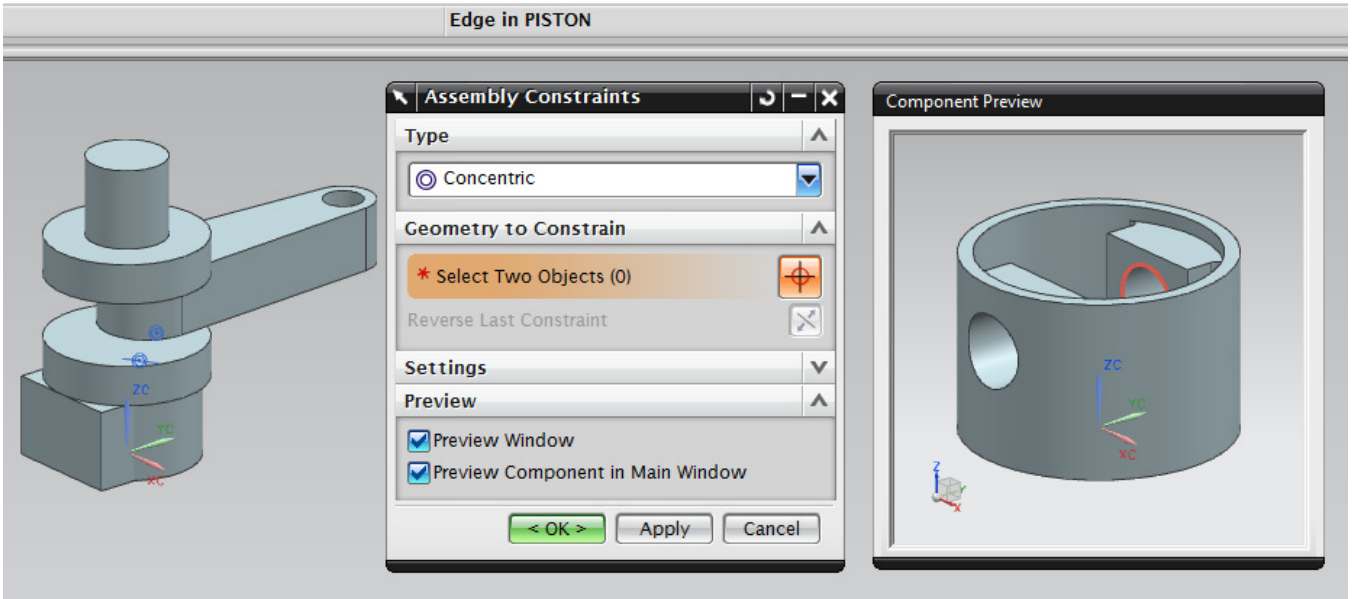

Figure 25 - The First Edge (Piston)

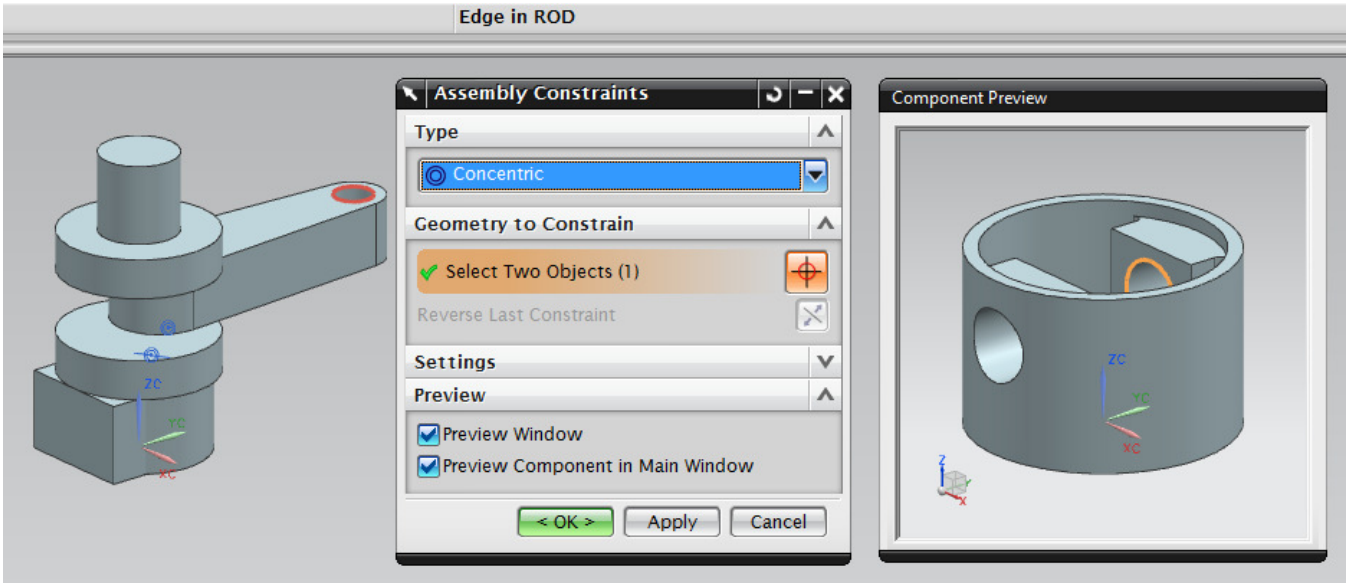

Figure 26 - The Second Edge (Rod)

Copyright 2010, Missouri S&T

Add the Sleeve.prt file and use a concentric constraint between the edges shown in Figure 27 and Figure 28.

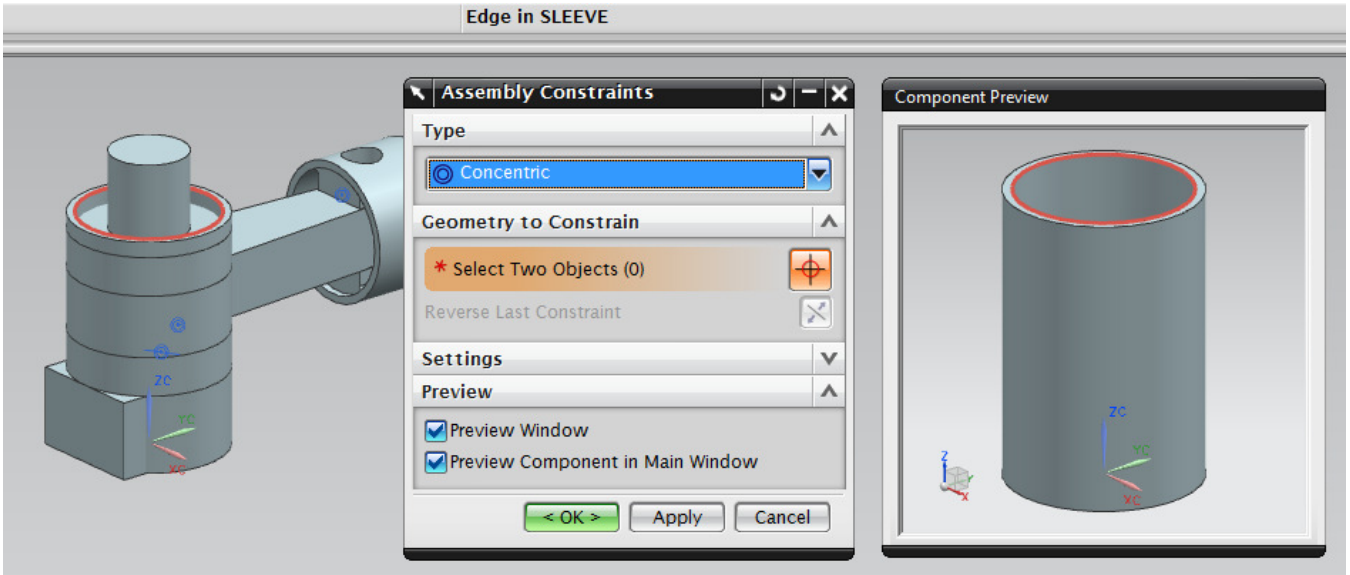

Figure 27 - The First Edge (Sleeve)

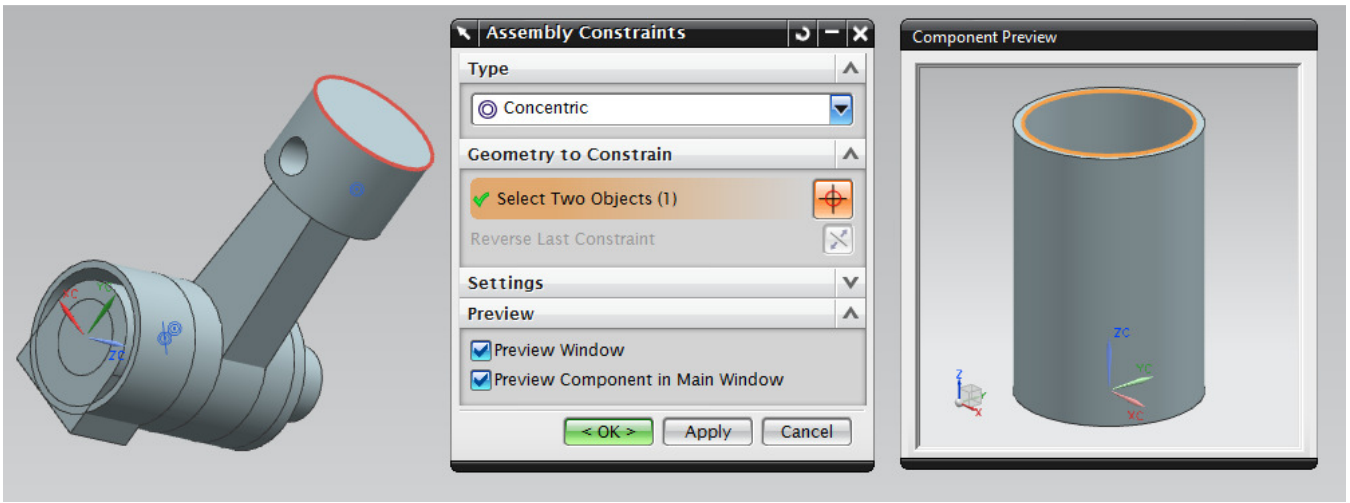

Figure 28 - The Second Edge (Piston)

Once the sleeve has been added, close the Add Component dialog. All necessary components have been added to this assembly. It should look like Figure 29.

Copyright 2010, Missouri S&T

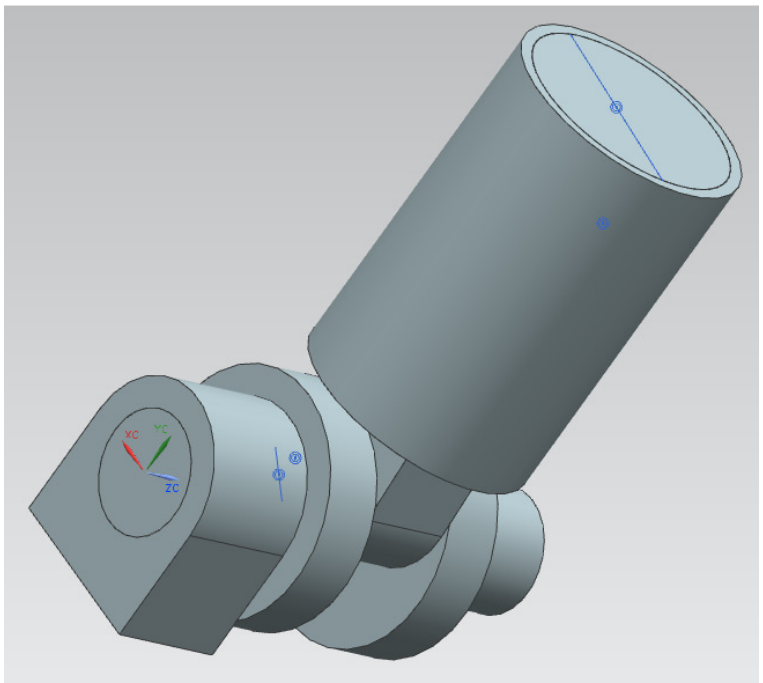

Figure 29 - The Assembly

Changing Constraints

The concentric constraint between the sleeve and piston was added to place the sleeve in the proper position. This constraint will prevent the piston from moving along the sleeve (the constraint forces the two edges to be in the same plane). We need to replace this constraint with a more appropriate one that allows the correct motion. To delete the constraint, open the Assembly Navigator (Figure 30) and expand the Constraints group by clicking the little plus sign next to Constraints.

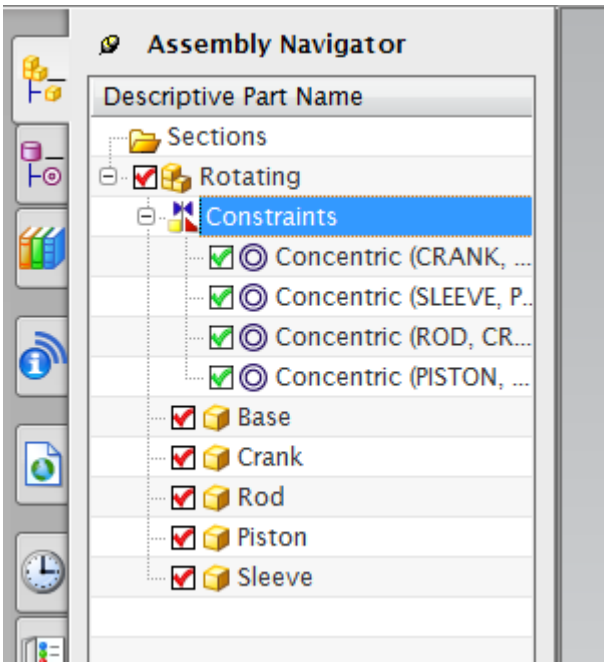

Figure 30 - Assembly Navigator

Copyright 2010, Missouri S&T

Right click on the concentric constraint between the sleeve and piston. Select Delete (Figure 31).

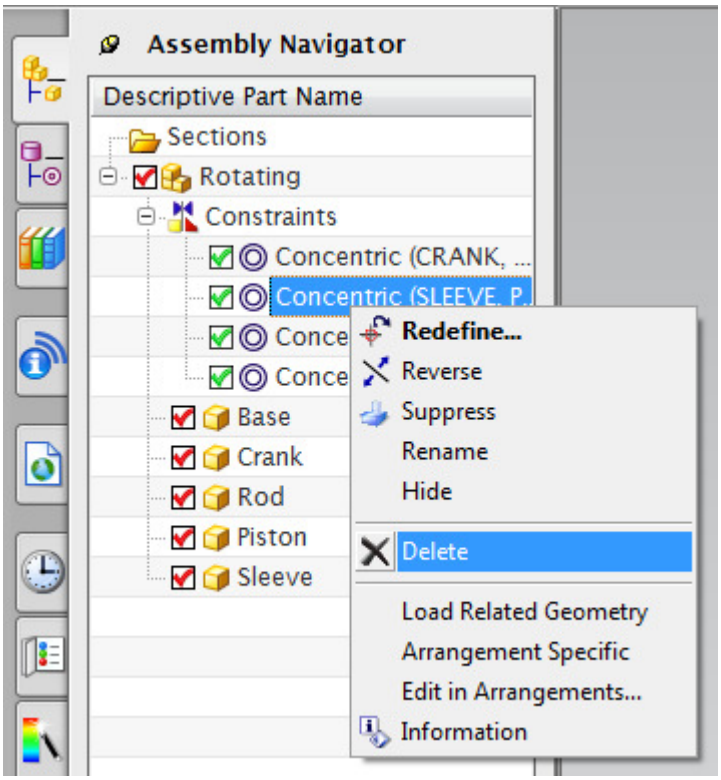

Figure 31 - Deleting a Constraint

Now add a new constraint. Select the Assembly Constraints button from the Assembly toolbar (it defaults to being at the bottom of the screen) as shown in (Figure 32).

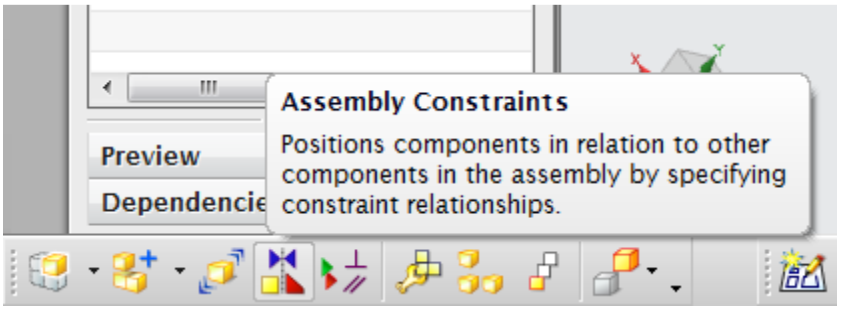

Figure 32 - Adding a Constraint

The Assembly Constraints dialog shown in Figure 33 will open. Select the Fit type from the dropdown list. These will constrain two parts to “fit” together based on the surfaces selected.

Copyright 2010, Missouri S&T

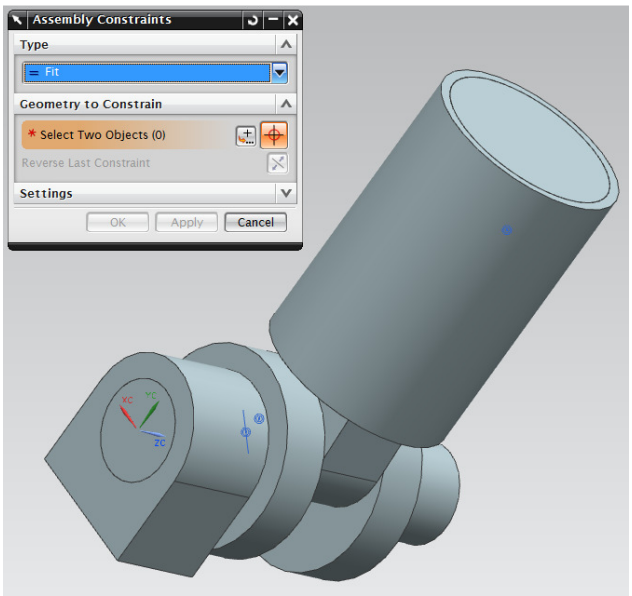

Figure 33 - Fit Constraint

To constraint the piston and sleeve, we need to select specific surfaces. To make hidden surfaces visible, we will have to change the rendering style. Right-click over the drawing and select Static Wireframe from the Rendering Style option in the popup (Figure 34).

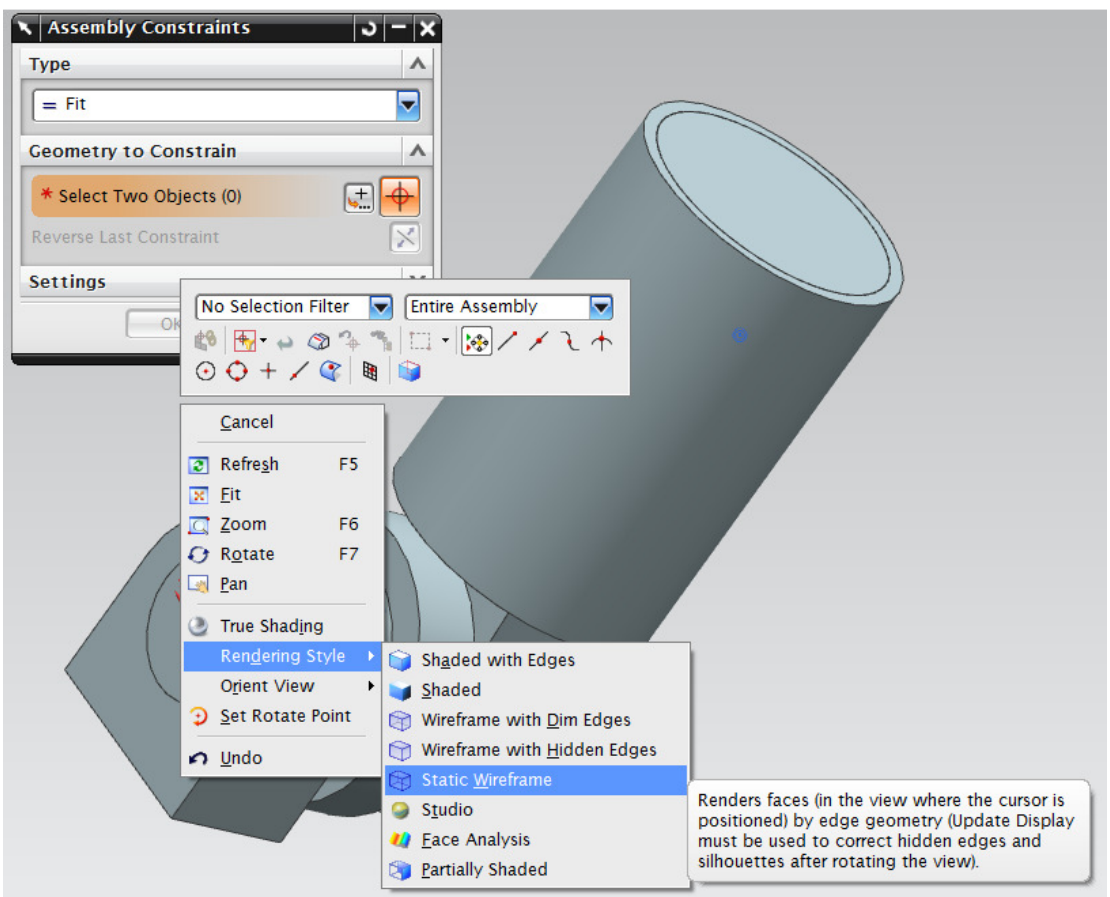

Figure 34 - Setting a Wireframe Style

Copyright 2010, Missouri S&T

Now, using the wireframe view, select the inner surface of the sleeve as shown in Figure 35.

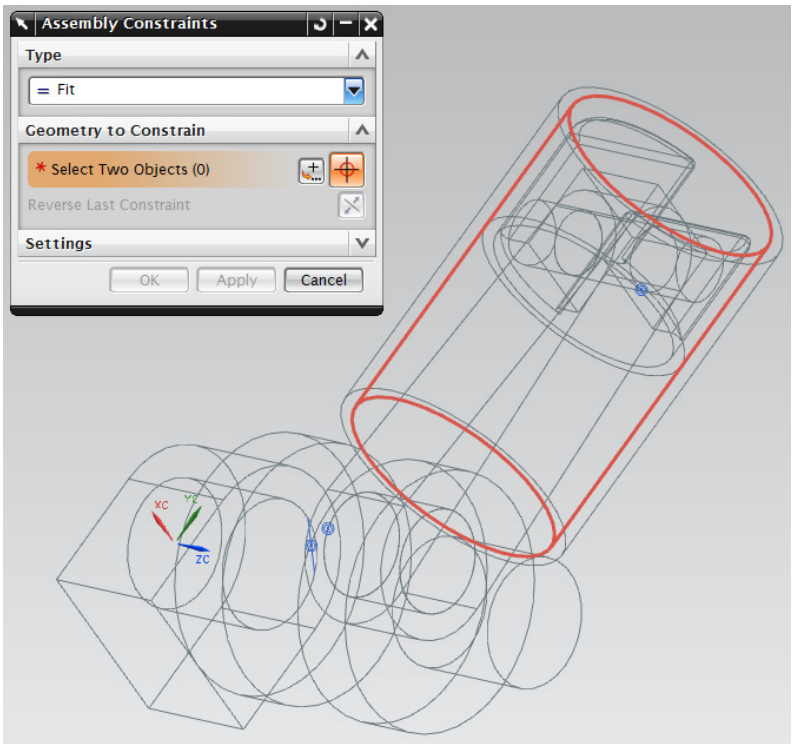

Figure 35 - The First Surface (Sleeve)

Now select the outer surface of the piston as shown in Figure 36.

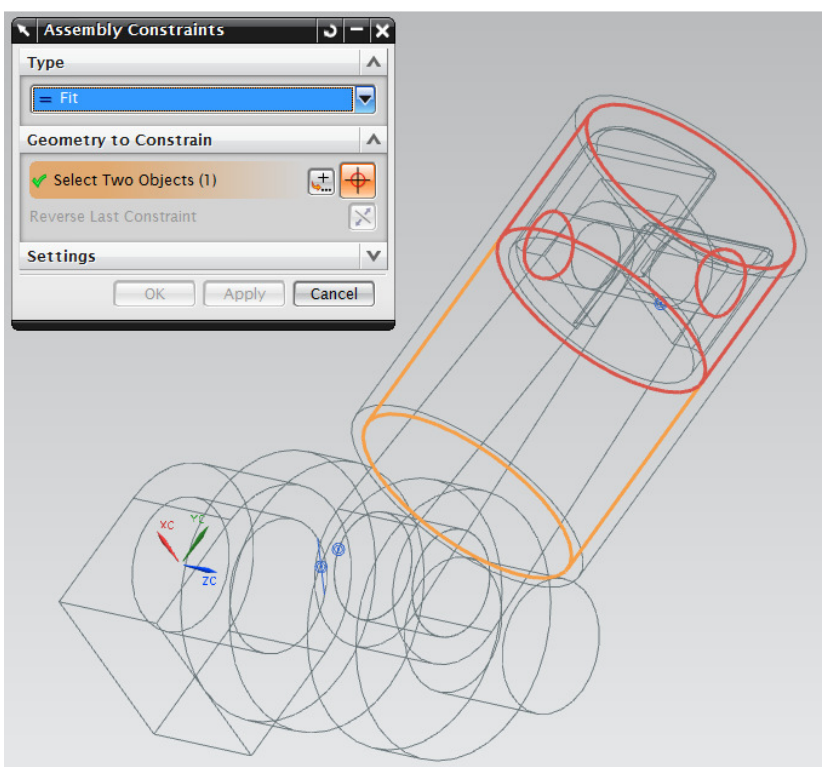

Figure 36 - The Second Surface (Piston)

Copyright 2010, Missouri S&T

Click Apply to add the constraint and close the Assembly Constraints dialog. Adding constraints to an assembly reduces the number of directions the constrained components can move. The allowable motion of a part is defined by its degrees of freedom. An unconstrained part in three dimensions has six degrees of freedom (three rotational and three translational). NX will allow you to visualize the degrees of freedom of a part using the Show Degrees of Freedom option shown in Figure 37.

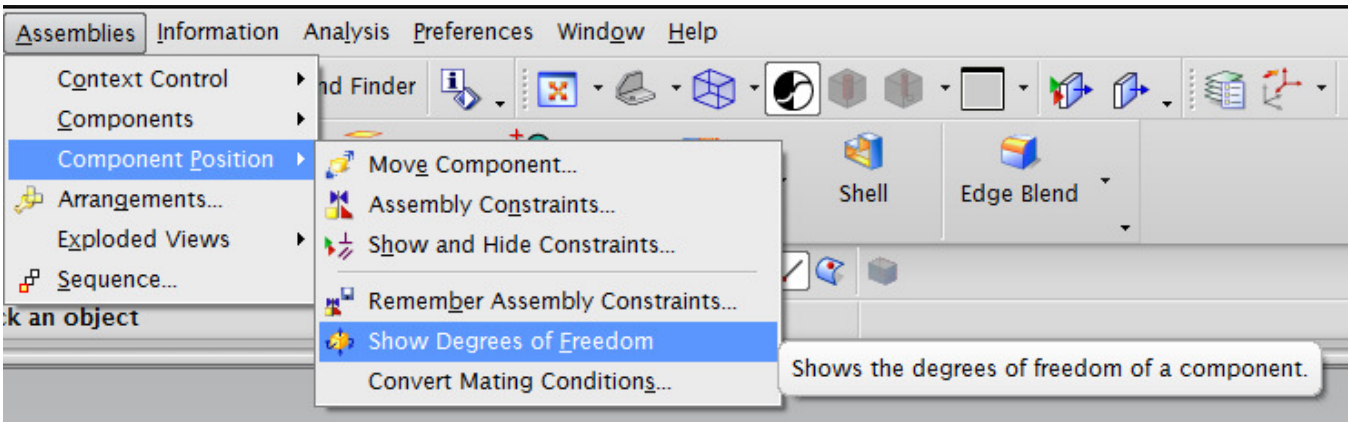

Figure 37 - Showing Degrees of Freedom

Once selected, you must identify a part to see its degrees of freedom. Select the crank as shown in Figure 38.

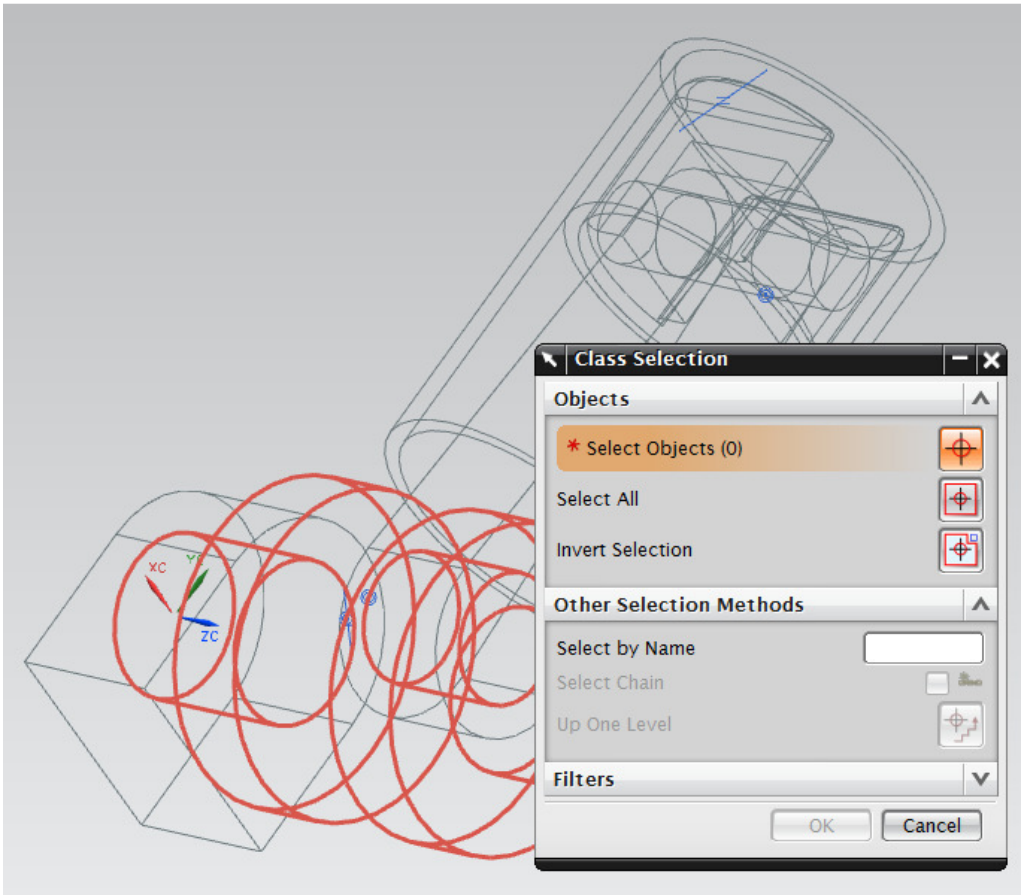

Figure 38 - Selecting the Crank

Copyright 2010, Missouri S&T

Click OK to visualize the crank's degrees of freedom (Figure 39). In this case, the arrows show that the crank still has 6 degrees of freedom. We still need to add constraints to properly constraint the assembly.

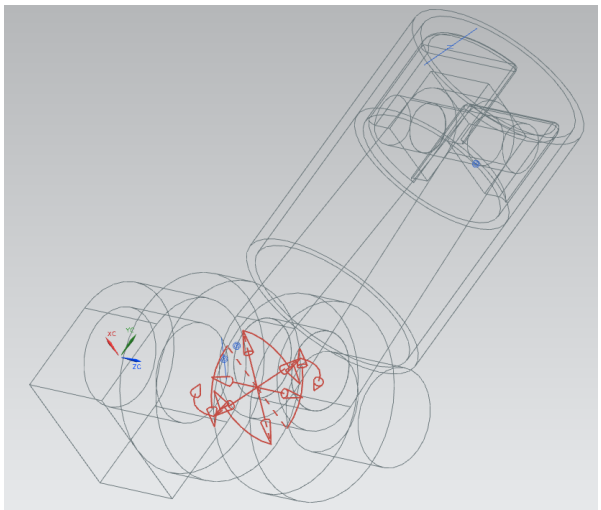

Figure 39 - The Crank's Initial Degrees of Freedom

The missing constraints concern the base and sleeve. As added, these parts have only been constrained to other parts in the assembly. They have not been fixed to anything outside of the assembly. Since these parts must remain stationary to allow the other parts to move properly, they must be constrained to a fixed location (grounded). To add these Fix constraints, select the Assembly Constraints button as before and set the Type to Fix (Figure 40). Select the base first and apply the constraint.

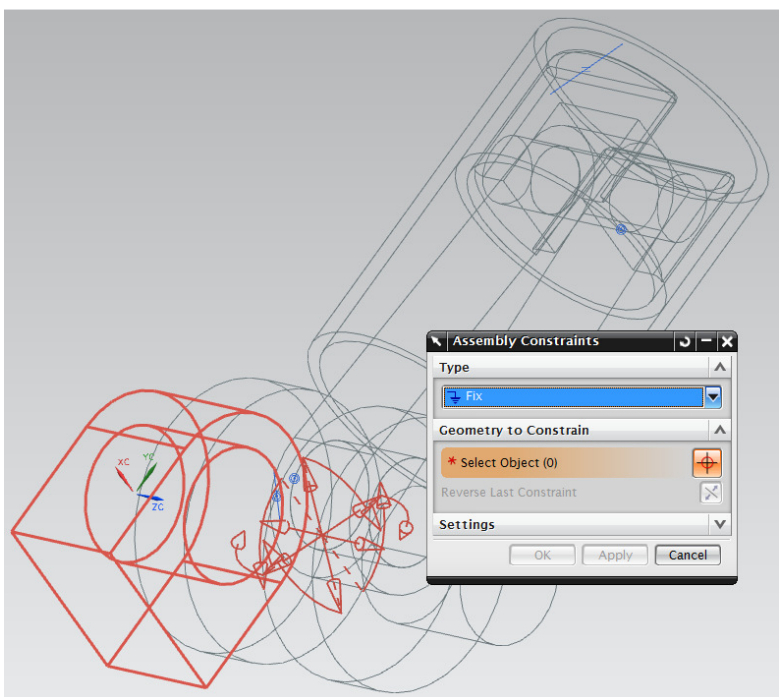

Figure 40 - Fixing the Base

Add a Fix constraint to the sleeve as well (Figure 41). Apply the constraint and close the dialog.

Copyright 2010, Missouri S&T

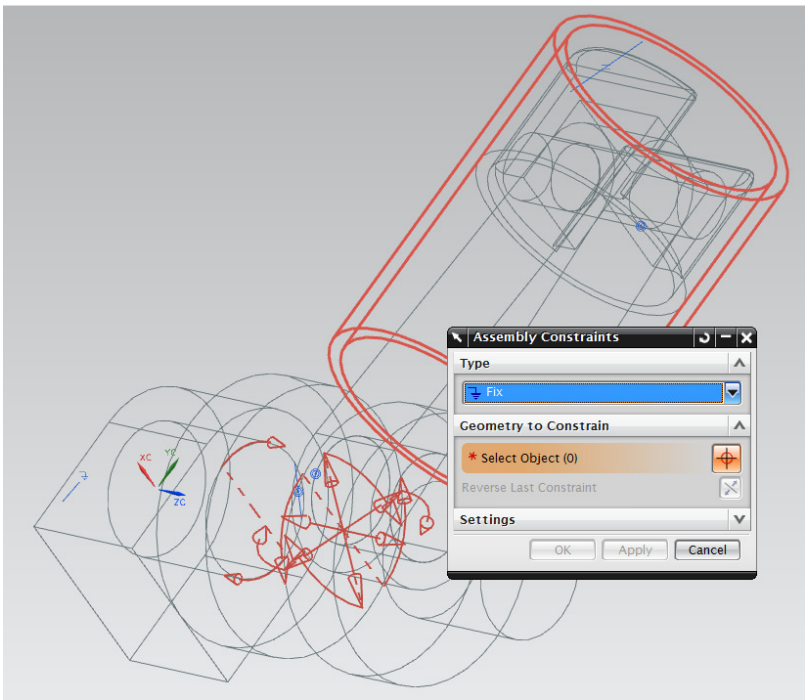

Figure 41 - Fixing the Sleeve

Check the degrees of freedom of the crank again. It should only have one rotational degree as shown in Figure 42.

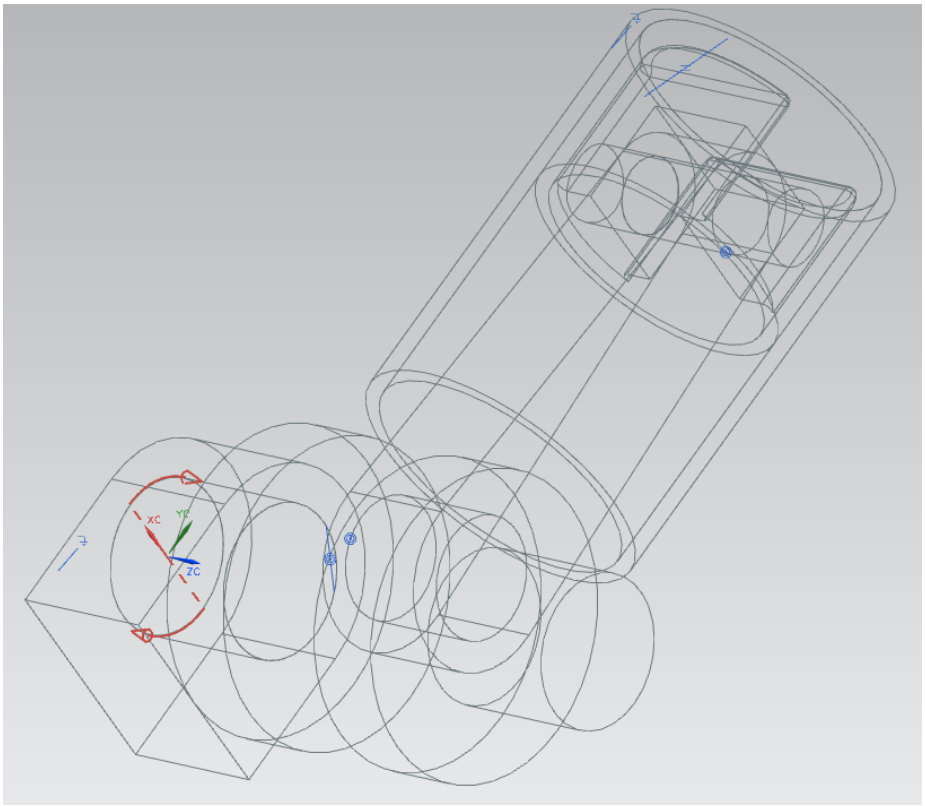

Figure 42 - The Crank's Final Degree of Freedom

Copyright 2010, Missouri S&T

Set the Rendering Style back to Shaded with Edges (Figure 43).

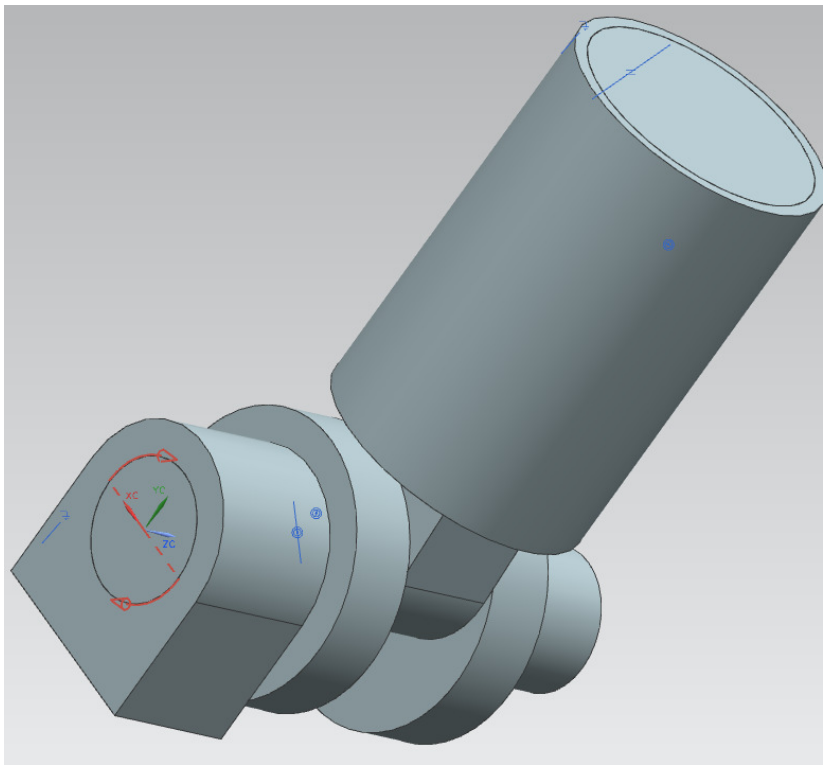

Figure 43 - Shaded Assembly

Moving Components

To move components in the assembly (with the constraints applied), use the Move Component button in the Assembly toolbar (Figure 44).

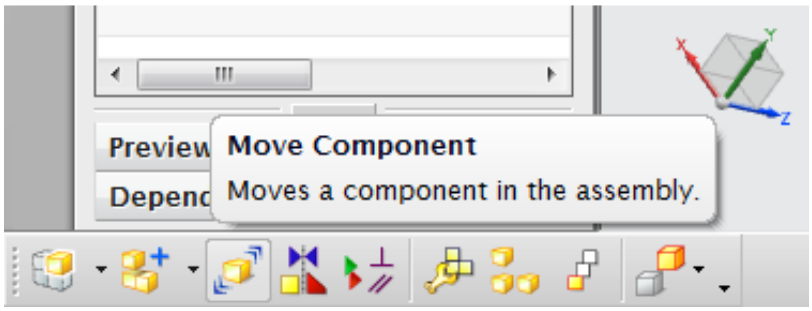

Figure 44 - Moving a Component

The dialog shown in Figure 45 will open. Select the crank.

Copyright 2010, Missouri S&T

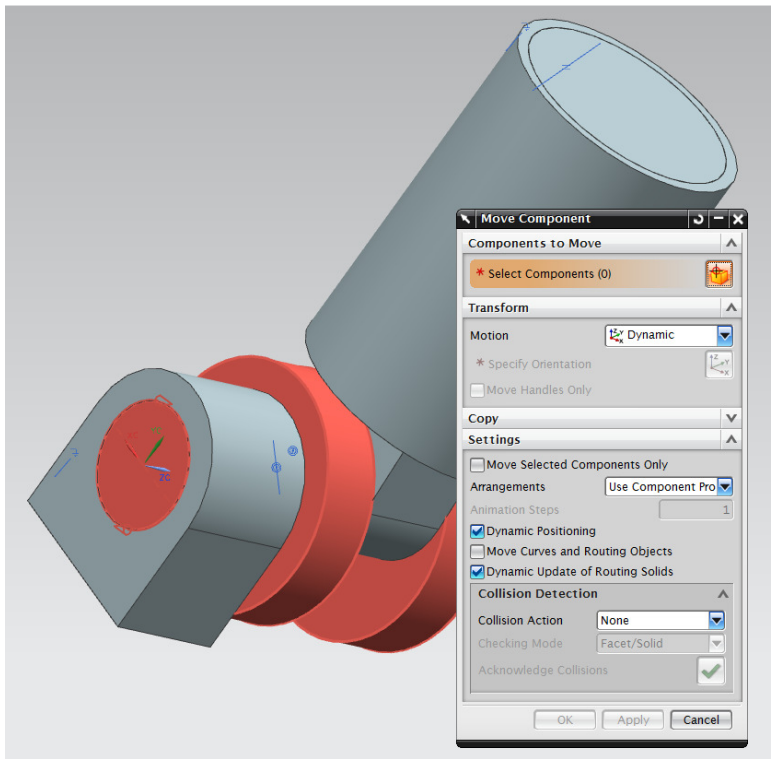

Figure 45 - Selecting the Crank

Set the Motion option to Dynamic (Figure 46). Click the button directly below the dropdown arrow that looks like a small coordinate system (next to the Specific Orientation text).

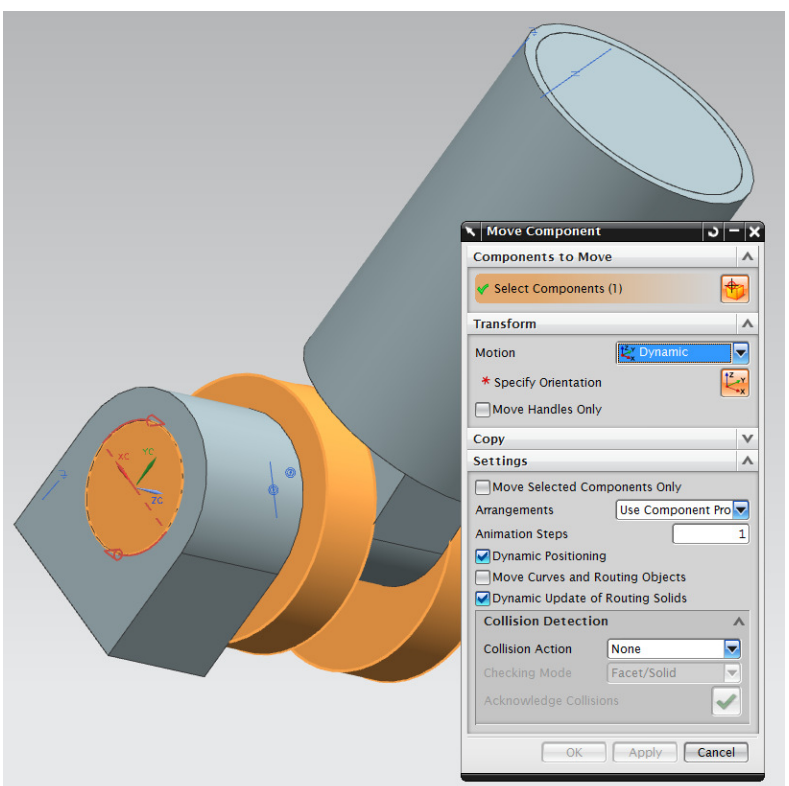

Figure 46 - Dynamic Motion

Copyright 2010, Missouri S&T

Make sure Move Selected Components Only option is not selected. This will allow all components in the assembly to move based on the constraints added previously. Move the cursor to the location shown in Figure 47. A set of movement arrows will appear in purple. Once they appear, click and drag to move the component. The assembly should move as a single constrained unit.

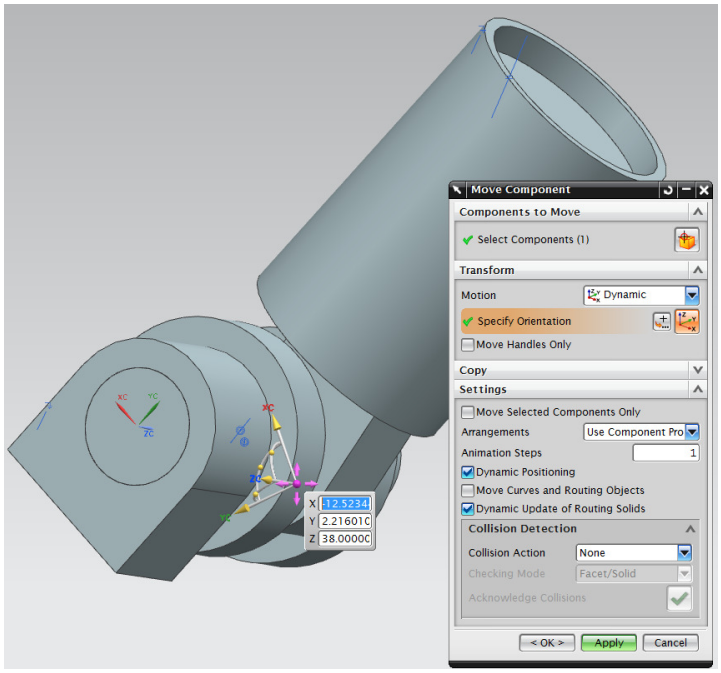

Figure 47 - Move Handle

If the handle will not move (even with the purple arrows shown), you may need to get it moving using a single axis as shown in Figure 48 first.

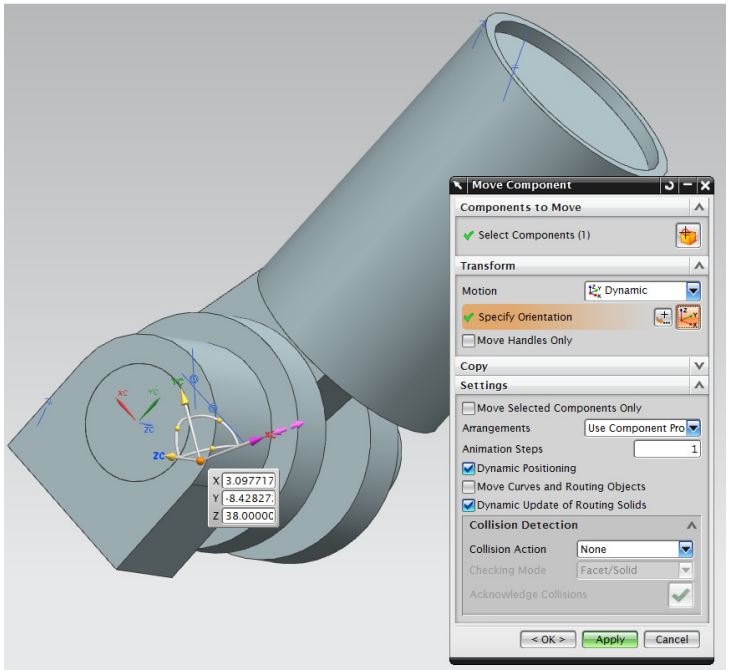

Figure 48 - Linear Move Handle

Copyright 2010, Missouri S&T

Move the crank around to different positions and observe the clearances between the connecting rod and the sleeve. Notice that in certain positions, the sleeve intersects the rod (Figure 49). Obviously, this would be a problem if the components were actually built and assembled as modeled. This is one useful feature of constrained assemblies, you can investigate dynamics clearances before parts are actually made. Changes can be made to the part files to adjust the clearances and then the assembly can be moved to recheck for intersections.

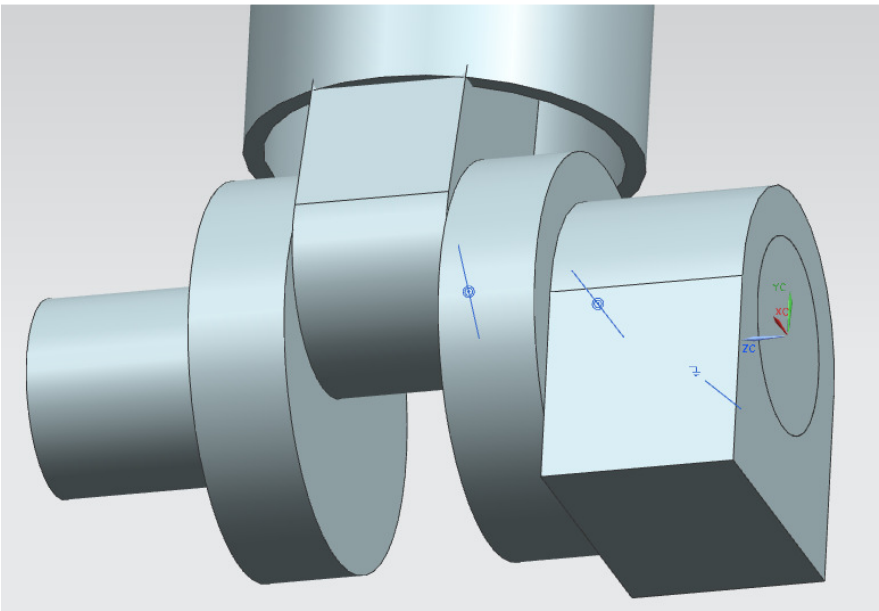

Figure 49 - A Collision

Wrapping Up

You should now be able to create constrained assemblies of parts using NX and investigate simple motion using these assembles.

Assignment

Create the assembly shown in this tutorial. Submit the assignment as a .zip file that contains the parts of the assembly and the assembly part file itself. Test to make sure that the assembly properly opens when the contents of the zip file are expanded into a new folder. To create the zip file in Windows, open the folder containing the parts and assembly, select them all using Ctrl clicking, right-click and select Send To then Compressed (zipped) Folder. Rename the .zip file appropriately and submit it on Blackboard. Points will be awarded as follows:

- All parts included (2)
- Concentric constraints (2)
- Fix constraints (2)
- Fit constraint (2)
- Allows proper motion (2)

Copyright 2010, Missouri S&T