Developer: rhutch@mst.edu

NX 7.5

Lesson 2 – Drawing a Part

Pre-reqs/Technical Skills

- Basic computer use
- Completion of NX 7.5 Lesson 1

Expectations

- Read lesson material
- Implement steps in software while reading through lesson material
- Complete quiz on Blackboard
- Submit completed assignment on Blackboard
- Attend help sessions as necessary
- Post comments on lesson web page

Objectives/Measurables

- Learn the basics of using NX to create 3D parts, measured via assignment score
- Learn various features in NX, measured via Blackboard quiz score

Lecture Topics

- Creating a Constrained Sketch
- Creating and Editing a Feature (Revolve)
- Sketching on a Surface
- Adding Features (Extrusion/Hole/Groove/Shell)
- Part Navigator (Edit/Suppress/Delete)

Table of Contents

NX 7.5 1
Lesson 2 – Drawing a Part 1
Pre-reqs/Technical Skills 1
Expectations 1
Objectives/Measurables 1
Lecture Topics 1
Introduction – NX 1
Drawing a Part 2
Initial Sketch 2
Revolving the Base 5
Sketching on a Surface 7
Placing the Holes 10
Adding the Edge Blend 13
Adding the Grooves 14
Making the Part Hollow 16
The Part Navigator 17
Assignment 19

Introduction – NX

NX is a premier 3D computer aided design suite. It allows you to model solid components and assemblies, to perform engineering analyses such as mechanism simulation and stress analysis, to create tool paths for computer-based manufacturing processes and to perform numerous other engineering design activities in a

Copyright 2010, Missouri S&T

single software environment. Software suites like NX are referred to as product lifecycle management (PLM) tools since they are generally integrated in the product design process from start to finish. The IDE20 tutorials for NX will focus on basic 3D drafting and component modeling.

Drawing a Part

The starting point for most parts is a constrained sketch. Basic sketching was covered in Tutorial 1. In this tutorial, sketch constraints and dimensions will be covered in more detail. This tutorial will cover the creation of a fully constrained part from scratch. To get started, open NX 7.5 and start a new part file. Make sure you save the part in a location that will be accessible later (S: drive, etc.). The part to be drawn is a piston for a small air-powered device. The complete part is shown in Figure 1. It consists of several features that must be created in sequence. These features include:

- An initial sketch
- A revolution
- A sketch on a surface
- An extrusion
- Placement of holes
- An edge blend
- Addition of grooves
- A shell operation

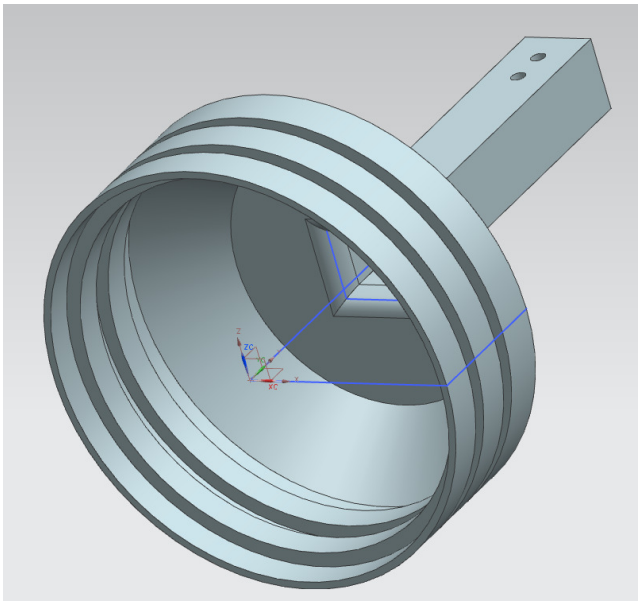

Figure 1 - The Part to be Drawn

Initial Sketch

The first step in creating the part is to draw an initial sketch for the base of the piston. This sketch will be revolved to form the base. The result should look like Figure 2.

Copyright 2010, Missouri S&T

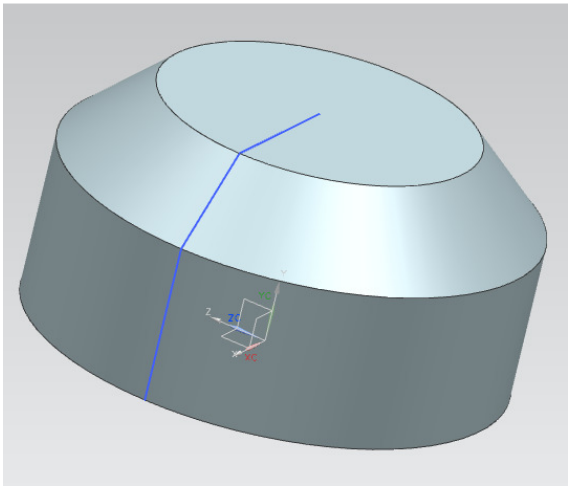

Figure 2 - The Base

To start, click the Sketch button in the Sketching Toolbar. Select the X-Y plane and click OK in the Sketch dialog. Orient the view to the sketch. Start a new line at the origin of the sketch (XC 0, YC 0) and draw the lines shown in Figure 3 using the sequence indicated with the red numbers. When drawing the lines, don't worry about getting the dimensions exactly right, just get them close. The exact values will be added later. The important aspects are getting the general shape correct and to make sure that vertical lines are vertical and horizontal lines are horizontal (it you get close NX will constrain them). Use Show All Constraints to make sure these constraints are added.

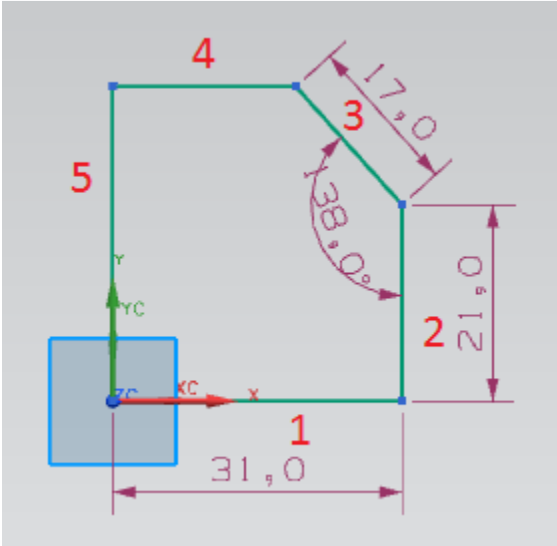

Figure 3 - Initial Sketch

As you draw, note the dimensions added by NX. These dimensions work with the constraints to define the sketch. Sometimes it is necessary to add dimensions manually to replace ones added automatically. For this sketch, it is desired to constrain the length of line 4. As constrained by NX, the length of line 4 is based on the other dimensions and not explicitly set. To change this, we need to add an Inferred Dimension to line 4. To do this, click the Inferred Dimension button in the Sketching Toolbar (Figure 4).

Copyright 2010, Missouri S&T

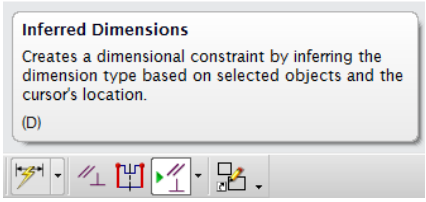

Figure 4 - Inferred Dimensions

NX will then let you select a drawing feature to dimension. Click on line 4, a dimension will appear that moves with your cursor. Drag the dimension to the location shown in Figure 5. Left-click to set the value of the dimension. Enter 20mm, the result should be the sketch shown in Figure 6.

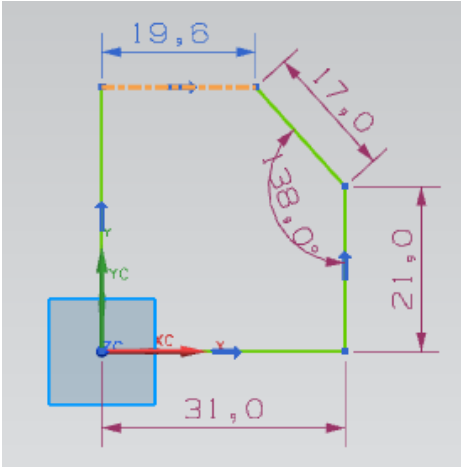

Figure 5 - Sketch w/New Dimension

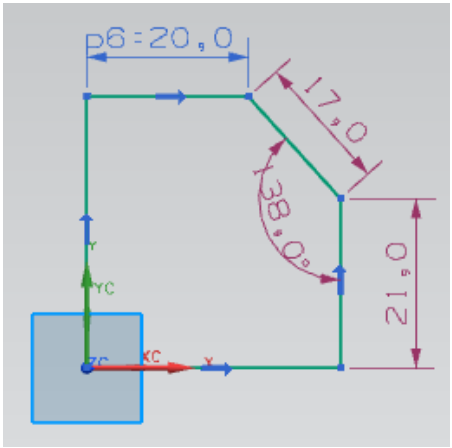

Figure 6 - Changing a Dimension Value

Note that adding the dimension to line 4 removed the dimension on line 1. If this dimension had not been removed, the sketch would have become over-constrained. An over-constrained sketch has more dimensions and/or constraints than the number necessary to completely define the sketch. To get the dimension back on line 1, add an inferred dimension to line 1 like you did for line 4. Set this value to 30mm. The result should be Figure 7. Note that now the dimension on line 3 is gone. To finish the sketch, set the length of line 2 to 20mm. To do this, simply double-click the dimension value and enter a new value. Also, set the angle between lines 2 and 3 to 135 degrees using the same approach (double-click the angle and change the value).

Copyright 2010, Missouri S&T

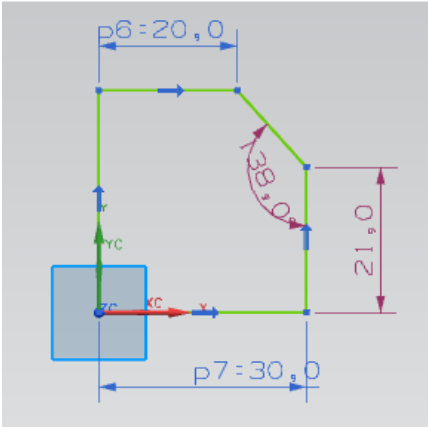

Figure 7 - Adding The Next Dimension

The sketch is now finished and includes the final dimension values. It should look like Figure 8. You can now click the Finish Sketch button to move to the next step.

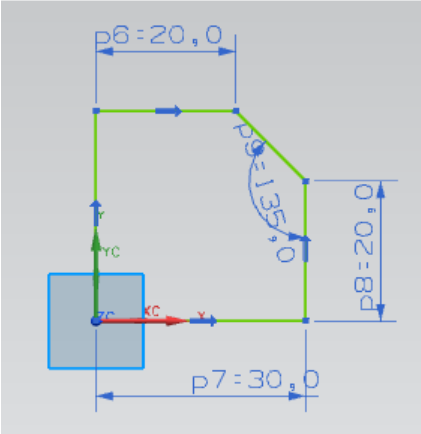

Figure 8 - Final Sketch

Revolving the Base

The next step is to revolve the sketch about line 5. To complete this revolution, select the Revolve option from the Feature toolbar (Figure 9). It may be nested under Extrude, if so click the down arrow.

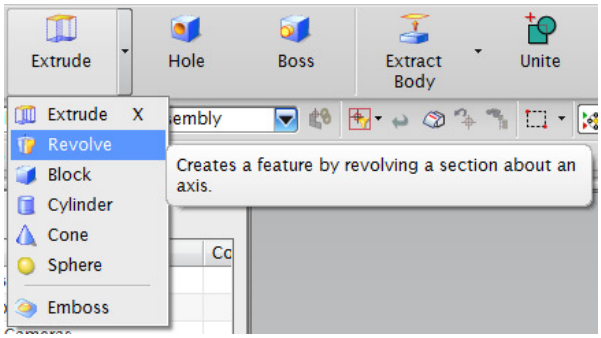

Figure 9 - Revolve

The Revolve dialog will open. The information required to complete this feature includes the drawing elements to revolve, the vector of revolution and the revolution angle. For this part, select the sketch drawn in the previous step (Figure 10).

Copyright 2010, Missouri S&T

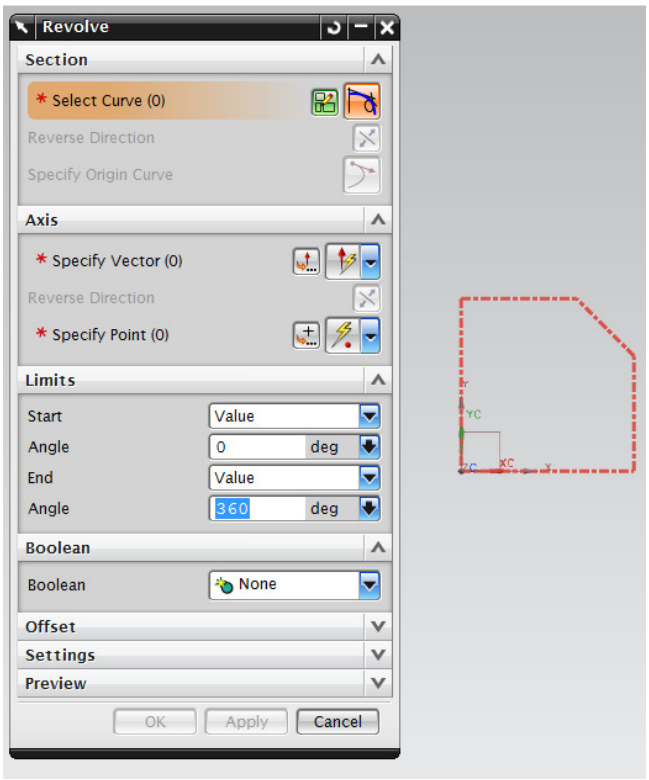

Figure 10 - Revolving the Base

Now the vector of the revolution must be selected. This vector sets the axis the sketch is revolved about and the direction the revolution angle is measured from. Open the Vector Dialog (Figure 11) to pick this vector.

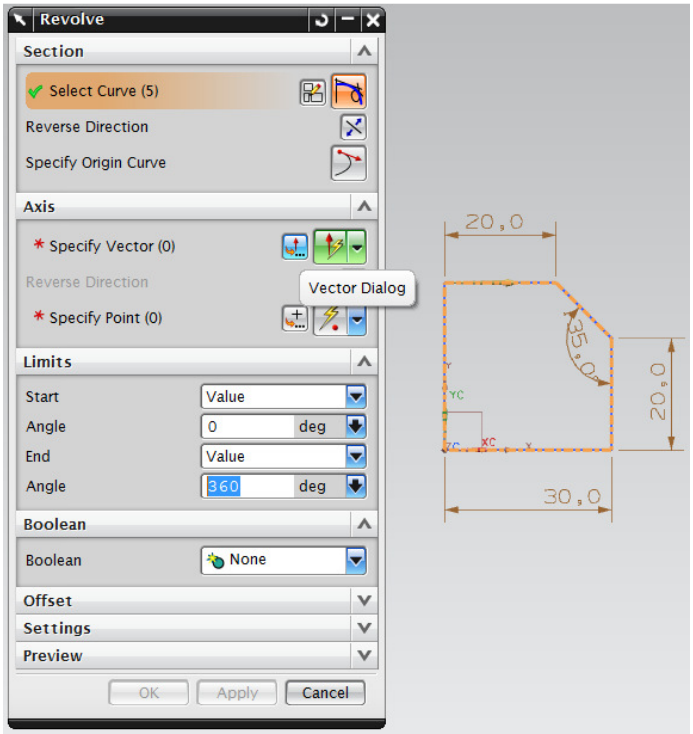

Figure 11 - The Vector Dialog

Copyright 2010, Missouri S&T

The Vector dialog will open. Select line 5, a yellow arrow will appear that shows the positive sense of the revolution vector. Click OK to close the vector dialog (Figure 12).

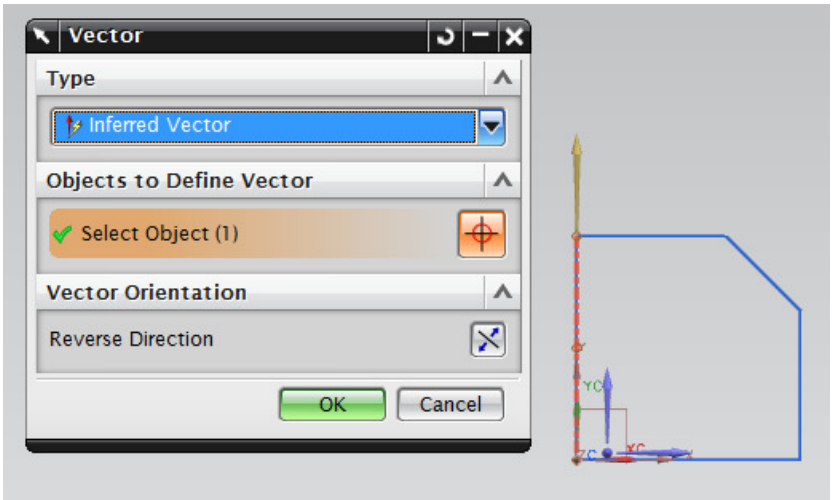

Figure 12 - Picking the Vector

Since the sketch needs to be revolved completely about the vector, leave the start and end angles at 0 and 360 degrees respectively. Click OK on the Revolve dialog to complete the revolution. The part should look like the one shown in Figure 2.

Sketching on a Surface

The next step in drawing the part is to create the rectangular projection (Figure 13). To create this feature, a sketch can be made on the top surface of the base and then extruded. To sketch on a surface, click the Sketch button in the Sketching toolbar.

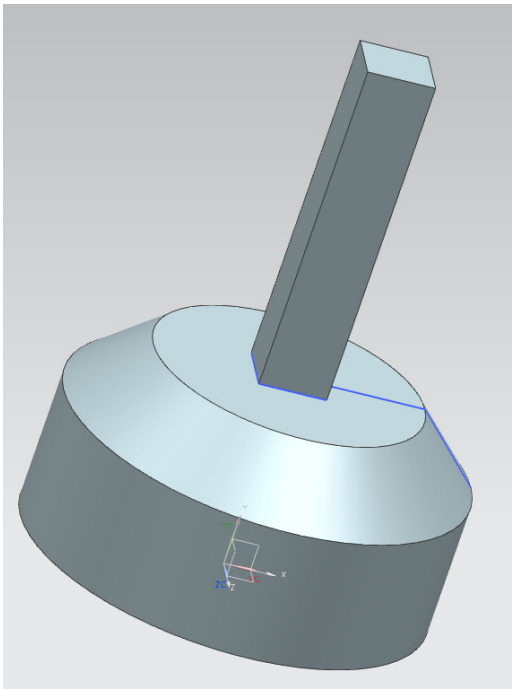

Figure 13 - Base with Projection

Copyright 2010, Missouri S&T

The Create Sketch dialog will open. Instead of picking an axis-plane, select the surface on the top of the base (Figure 14).

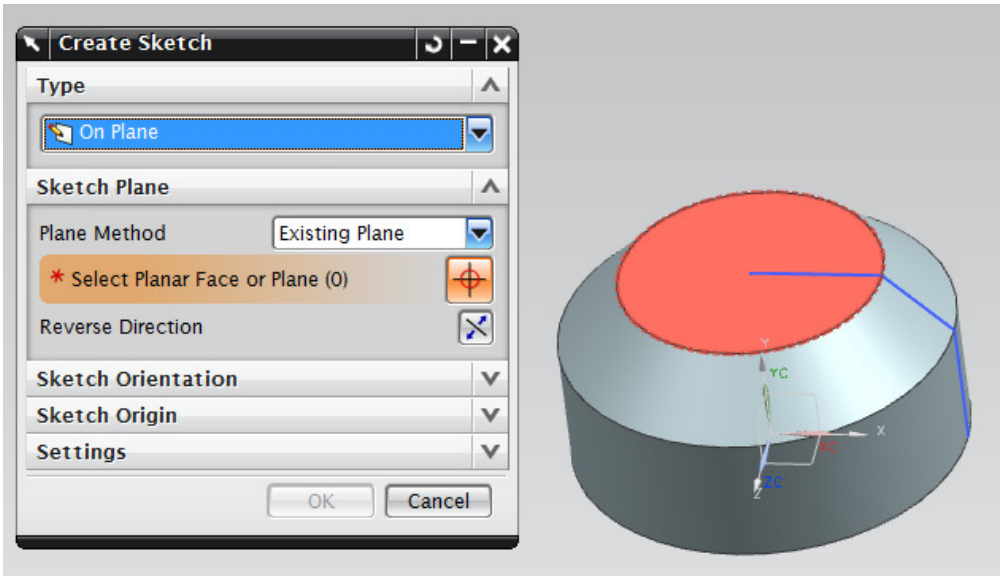

Figure 14 - Creating the Sketch

Once selected, a sketch coordinate system will appear. This defines the coordinates to be used when creating the new sketch. By default, the Z axis of this coordinate system will be perpendicular to the plane of the surface used to define the sketch. Click OK to start the sketch. Orient the view to sketch plane.

To draw the sketch for the rectangular projection, use the Rectangle tool in the Sketching toolbar. After selecting this tool, click to place the upper left corner of the rectangle then click again to place the lower-right. Don't worry about the exact placement, like before dimensions will be used to place it. The sketch should look like Figure 15.

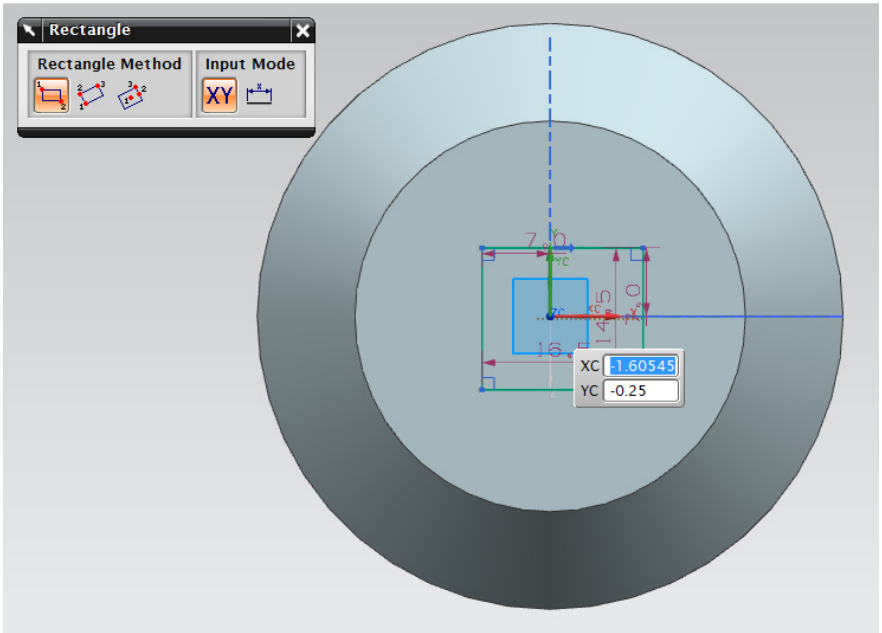

Figure 15 - Drawing the Profile

Copyright 2010, Missouri S&T

Note that NX added four dimensions automatically. These can be changed to precisely locate and size the rectangle. Change the height and width of the rectangle to 10mm. Now change the vertical and horizontal offsets from the sketch origin to 5mm (half of 10mm). This will center the rectangle and correctly set its size (Figure 16). Finish the sketch.

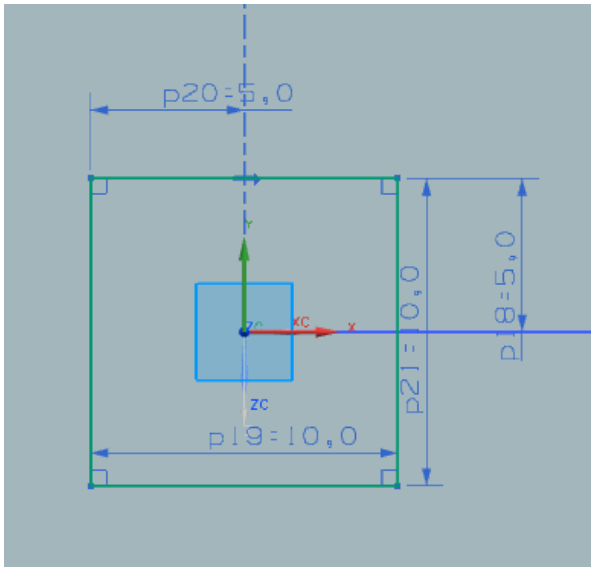

Figure 16 - Editing Dimensions

To extrude the sketch, click the Extrude button in the Feature toolbar. Select the square profile from the sketch (Figure 17).

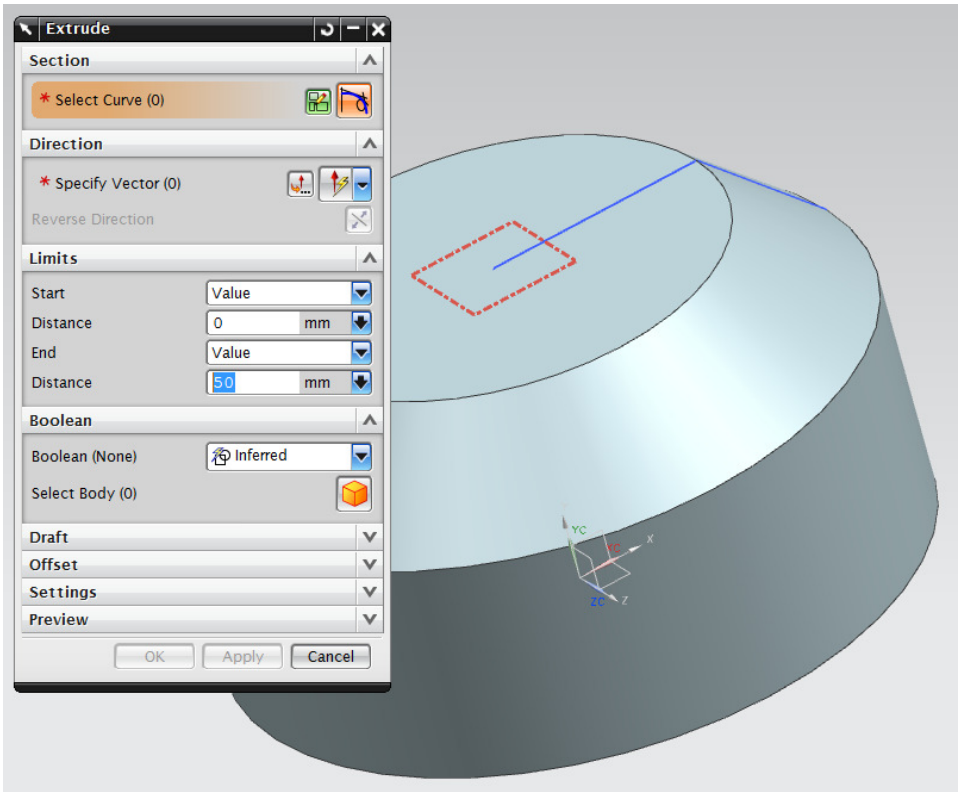

Figure 17 - Extruding the Profile

Copyright 2010, Missouri S&T

A preview of the extrusion with a default length will appear. Change this length to 50mm (under Distance after End in Limits) and click OK to add the feature.

Placing the Holes

To place the holes in the rectangular position of the piston (Figure 18), use the Hole feature in the Feature toolbar. The Hole dialog will open. The location for the holes must now be defined. To place the first hole (the one closest to the end), move the cursor to the face where the hole needs to be located (Figure 19) and click in the rough location of the hole's center (once again, precision isn't important here just get close). Once you click, a new sketch will be started on the face selected (Figure 20).

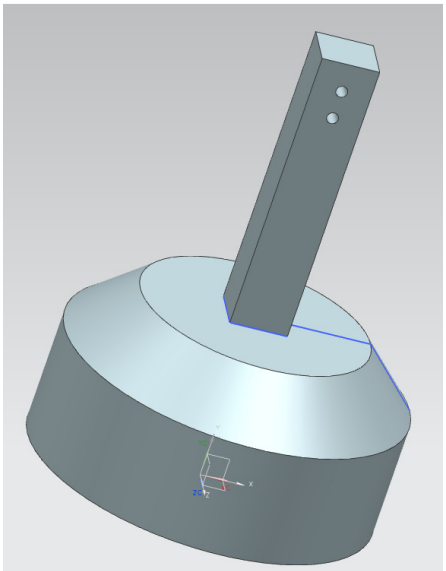

Figure 18 - Holes Added

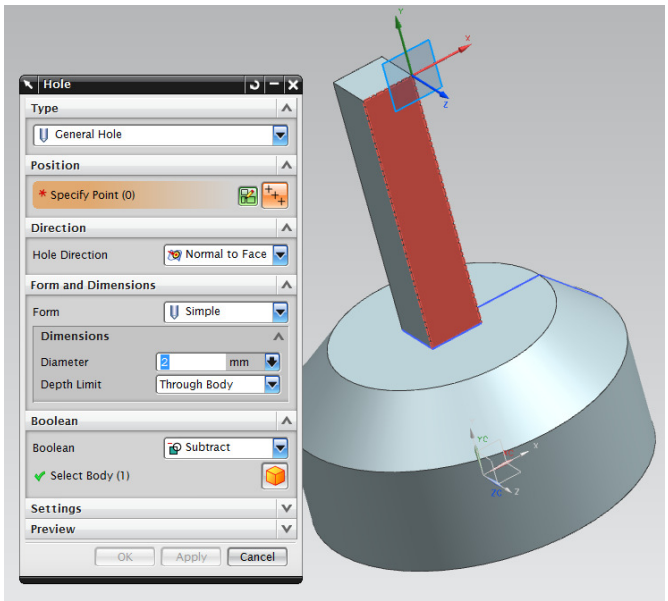

Figure 19 - Place the First Hole

Copyright 2010, Missouri S&T

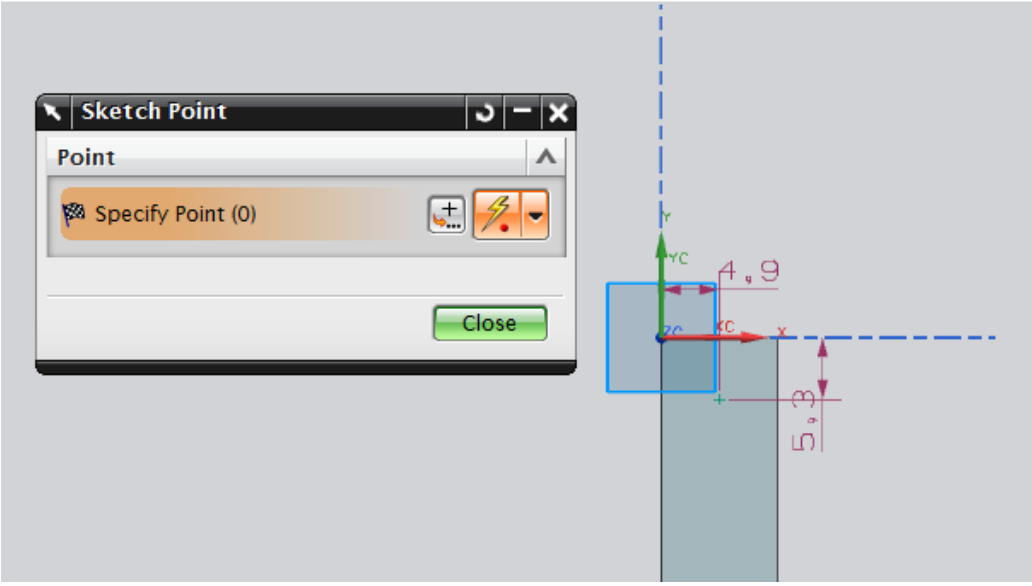

Figure 20 - Adding More Holes

The point originally clicked will be shown with a cross. Click below this point to set the next hole start location (Figure 21).

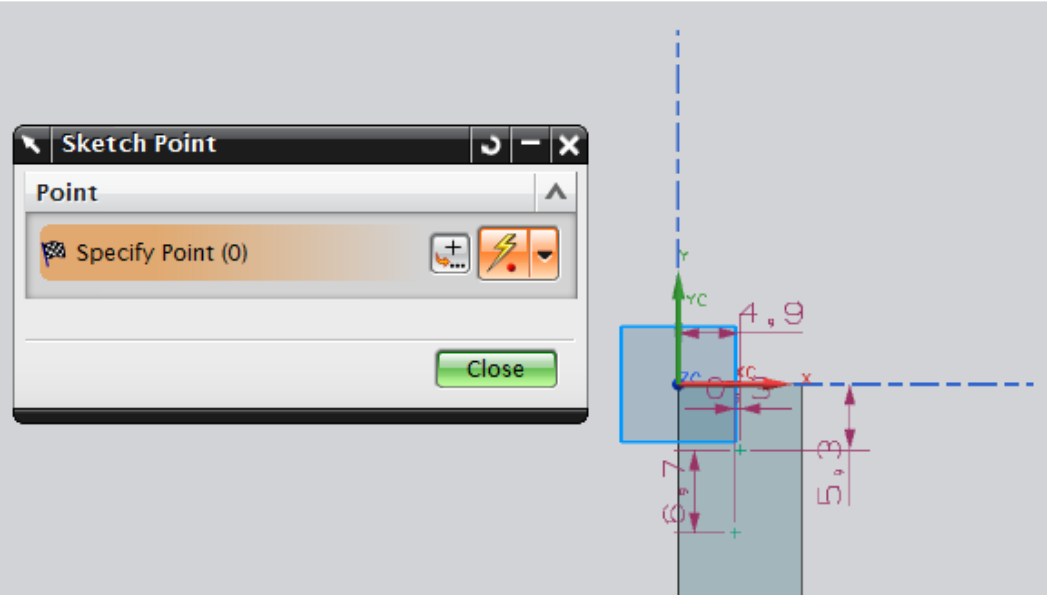

Figure 21 - Both Holes Placed

Close the Sketch Point dialog. You will now need to set the dimensions to their exact values. In this case, center the holes by setting the horizontal and vertical dimensions to 5mm. See Figure 22 for reference.

Copyright 2010, Missouri S&T

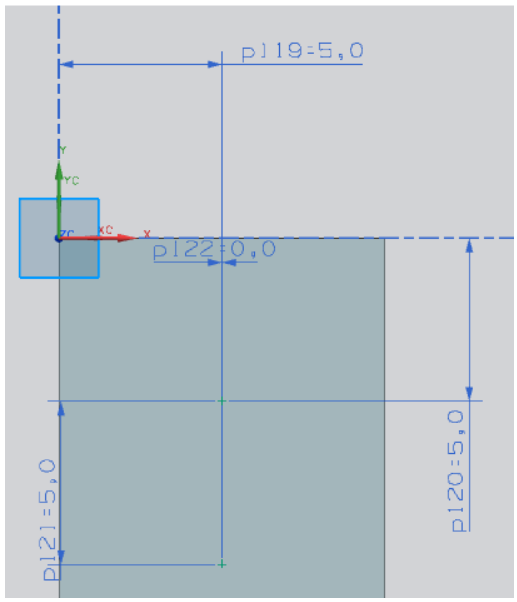

Figure 22 - Setting the Dimensions

Click the Finish Sketch button to complete the sketch for the holes. You will be returned to the Hole dialog. Set the Diameter to 2mm and the Depth Limit to Through Body. Click OK to add the hole features (Figure 23). The part should look like the one shown in Figure 18.

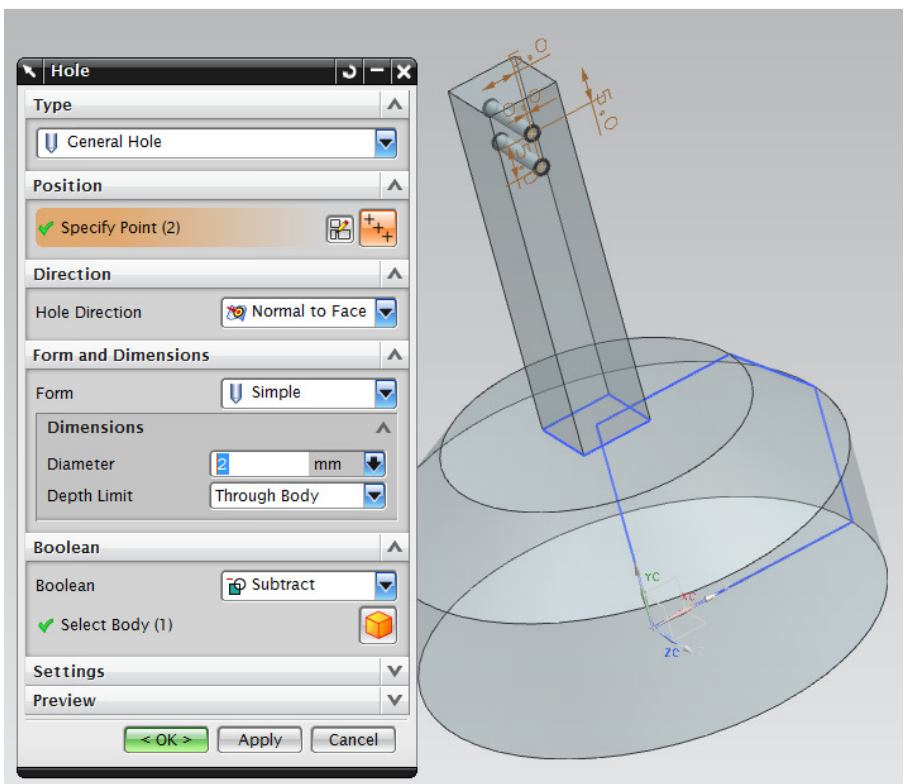

Figure 23 - Completing the Holes

Copyright 2010, Missouri S&T

Adding the Edge Blend

An edge blend is needed on the part to break the sharp corner where the rectangular projection meets the base. To add the edge blend, select the Edge Blend feature from the Features toolbar (Figure 24).

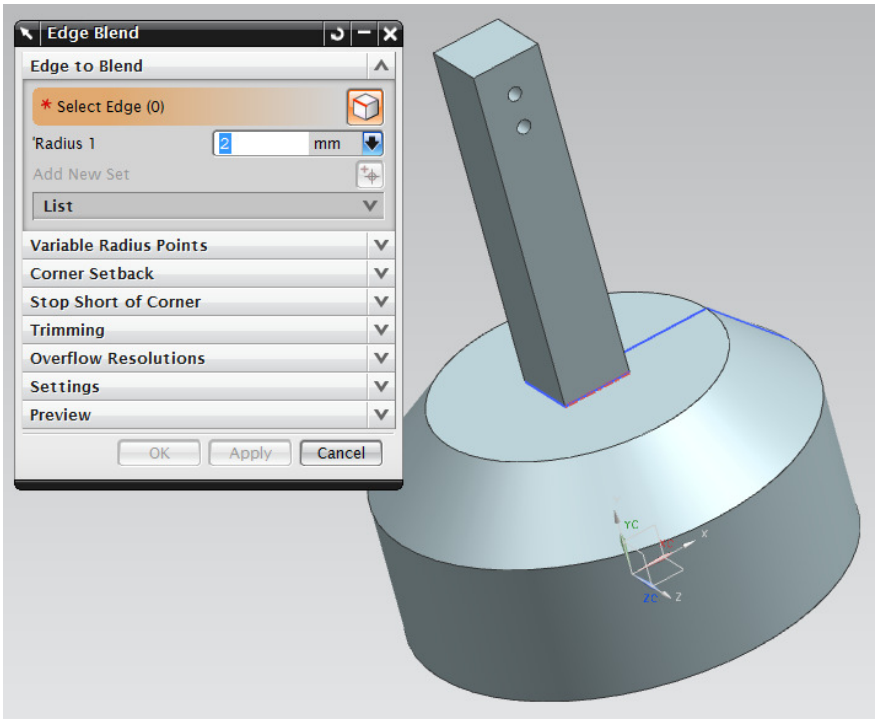

Figure 24 - Adding the Edge Blend

Set the radius to 2mm and select the first edge to be blended. Select the next edge and then rotate the part to select the last two edges. As you select the edges, a preview of the blend will appear. Click OK to add the feature. The result should look like Figure 25.

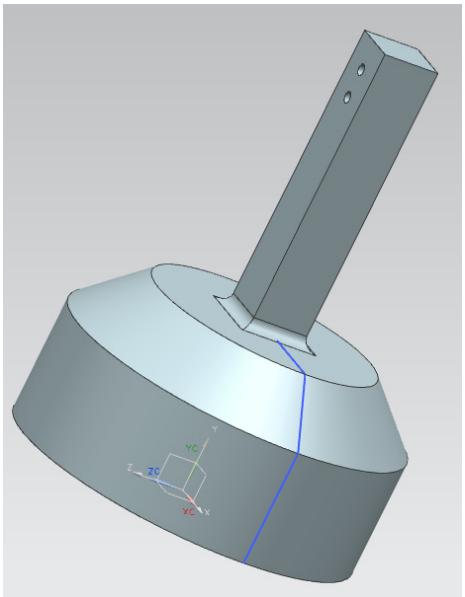

Figure 25 - Part With Edge Blend

Copyright 2010, Missouri S&T

Adding the Grooves

The piston needs two grooves for sealing rings (Figure 26). These features can be placed in several ways. The original sketch that was revolved can be edited to include the profile of these grooves. Alternatively, the grooves can be added using the Groove feature.

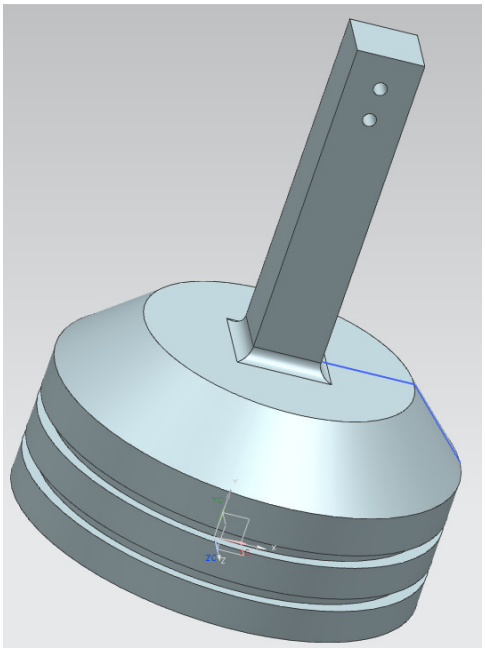

Figure 26 - Part With Grooves

To access the Groove feature, open the Insert menu (at the top of the window) and click Groove from the Design Features sub-menu (Figure 27).

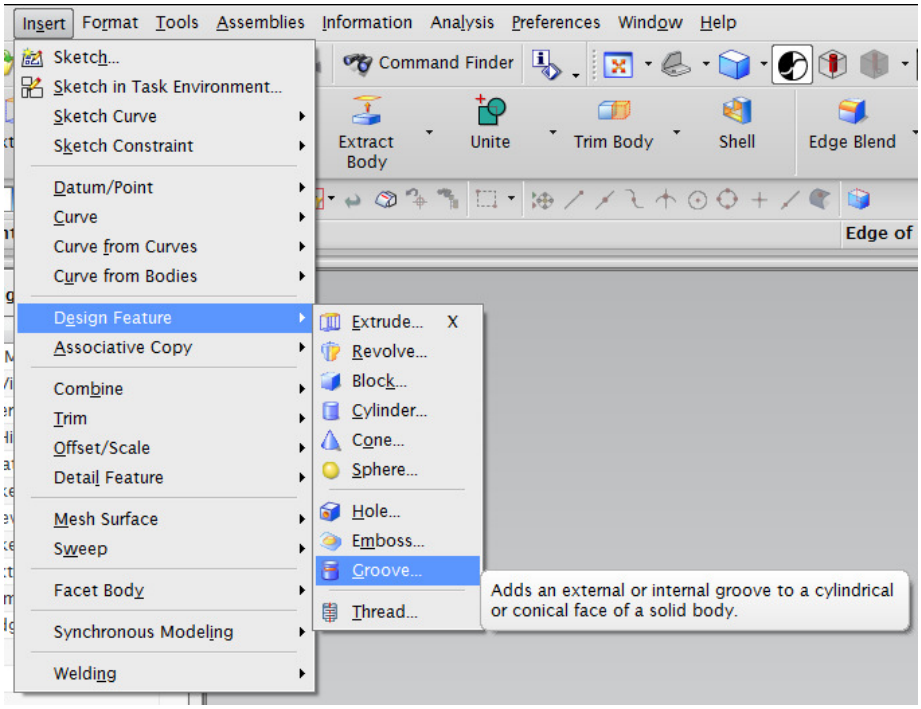

Figure 27 - Groove

Copyright 2010, Missouri S&T

Select Rectangular from the dialog that opens. This sets the base of the groove to have sharp corners. A Ball End groove can be used that has a rounded profile at the base of the groove. The next step is to select the placement face. Click the outer surface of the base (Figure 28).

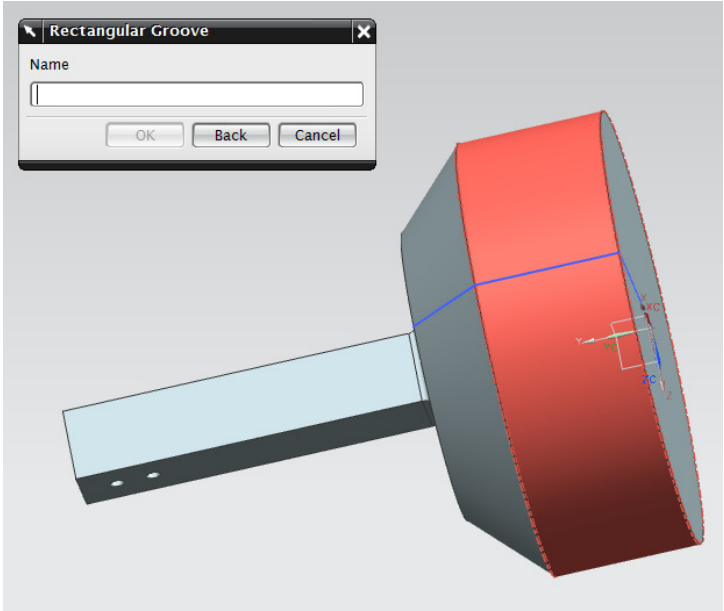

Figure 28 - Picking the Surface

Once selected, two parameters will be prompted for: Groove Diameter and Width. Set these as shown in Figure 29 and click OK.

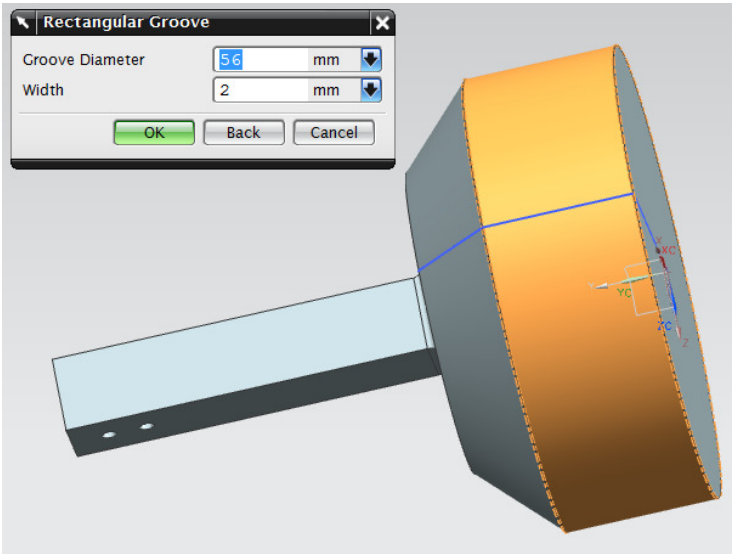

Figure 29 - Setting the Parameters

NX will then prompt for a target edge. This edge is used to locate the groove along the selected surface. The groove needs to be placed relative to the edge at the bottom of the base (Figure 30).

Copyright 2010, Missouri S&T

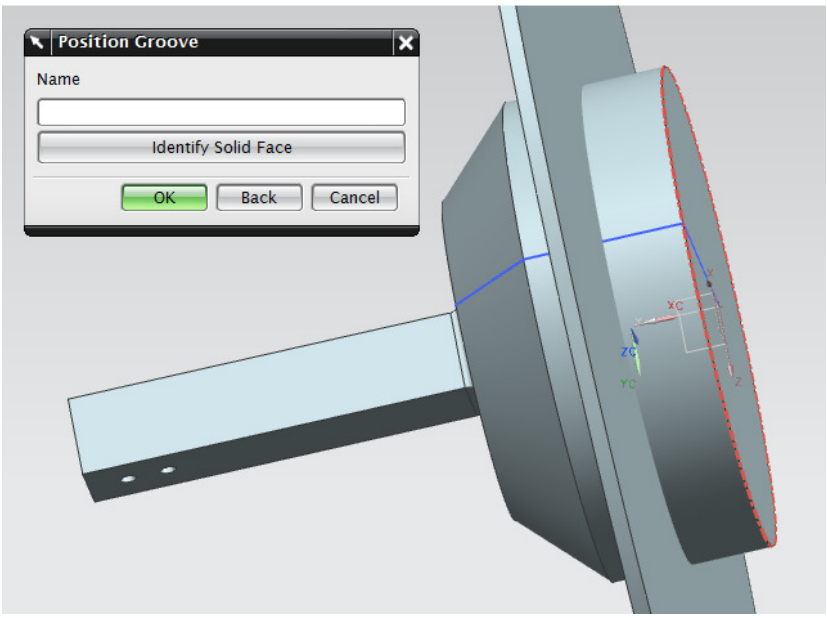

Figure 30 - Picking the Target Edge

NX will then prompt for the tool edge. This is the edge of the groove that will be measured from the target edge previously selected. Select the edge closest to the target edge (Figure 31).

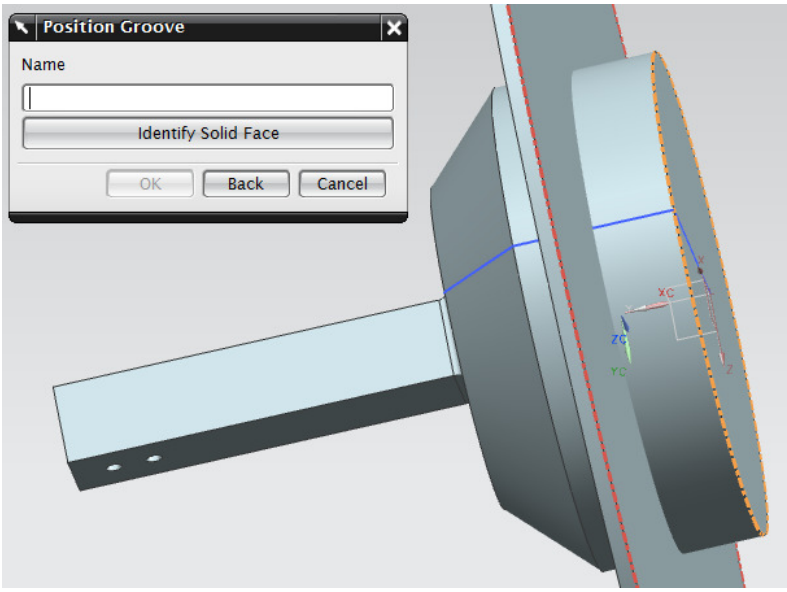

Figure 31 - Picking the Tool Edge

Once selected, NX will prompt for the distance between these edges. Set it to 5mm and click OK to add the groove. Repeat this process to add another groove with the same dimensions 5mm further down the face. The result should look like Figure 26.

Making the Part Hollow

The final step is to make the part hollow. To make an existing part hollow, use the Shell feature in the Feature toolbar. Once started, NX will prompt for the shell thickness and the face to remove. Set the shell thickness to 1mm and then select the face at the bottom of the base (Figure 32).

Copyright 2010, Missouri S&T

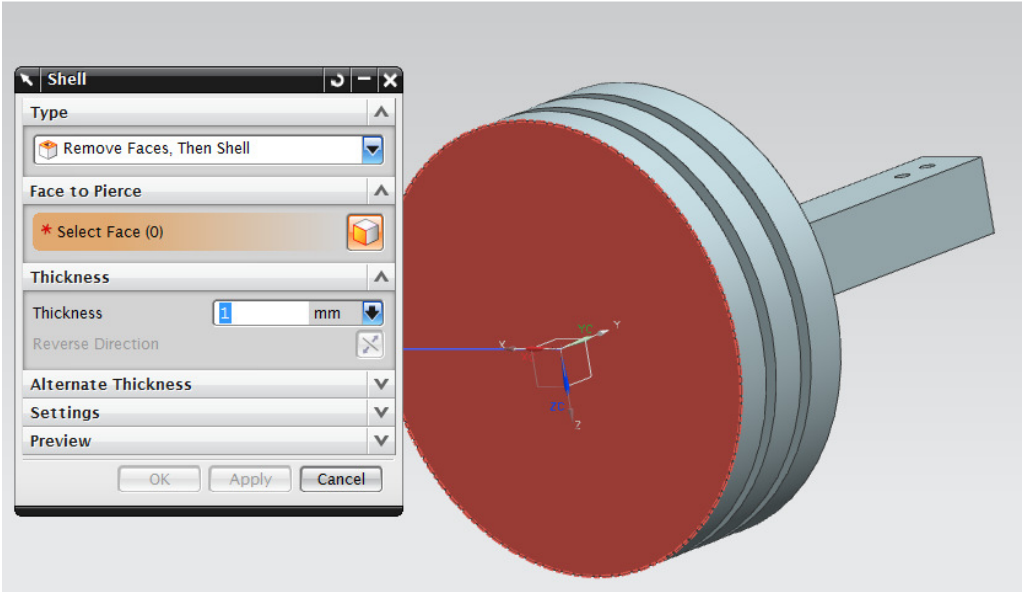

Figure 32 - Picking The Shell Face

A preview will be shown, click the OK button to complete the feature (Figure 33).

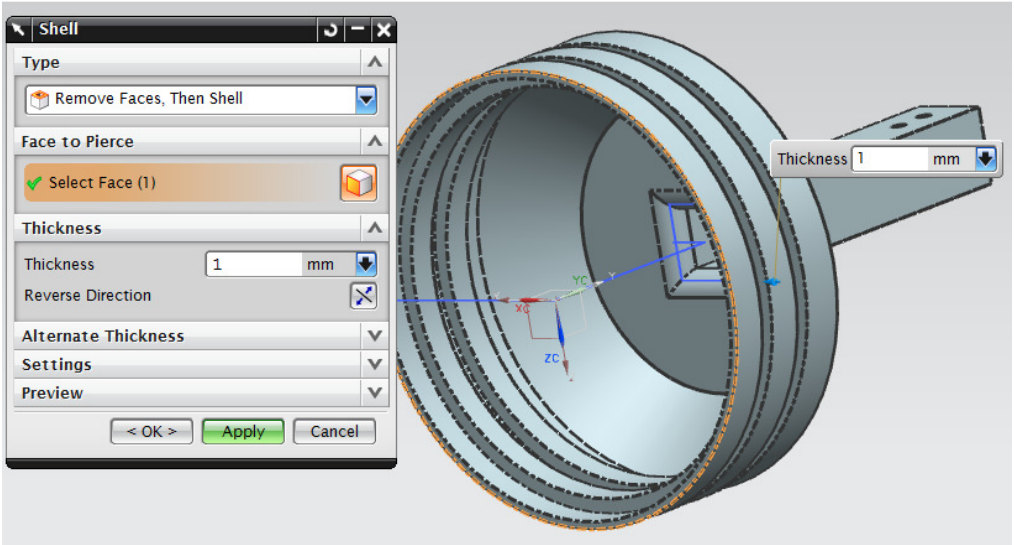

Figure 33 – Shell Preview

The part is now complete.

The Part Navigator

Now that the part is drawn, any of the previously added features can be suppressed, deleted or edited. Suppressing a feature removes it from the part without deleting it. To suppress a feature, click the check next to the feature in the Part Navigator (Figure 34). To unsuppress, click the empty checkbox. Note that any features that depend on features that have been suppressed will themselves be suppressed. For example, if you suppress the extrusion of the rectangular projection, the hole feature will be suppressed as well since it can no longer be properly located. To delete a feature, right click the feature in the Part Navigator and select Delete. Note that this will affect any features associated with the feature being deleted. To edit an existing feature,

Copyright 2010, Missouri S&T

right-click the feature and select Edit to change all aspects that can be changed or Edit Parameter to just change parametric values. Experiment with editing features to see how these changes affect the part.

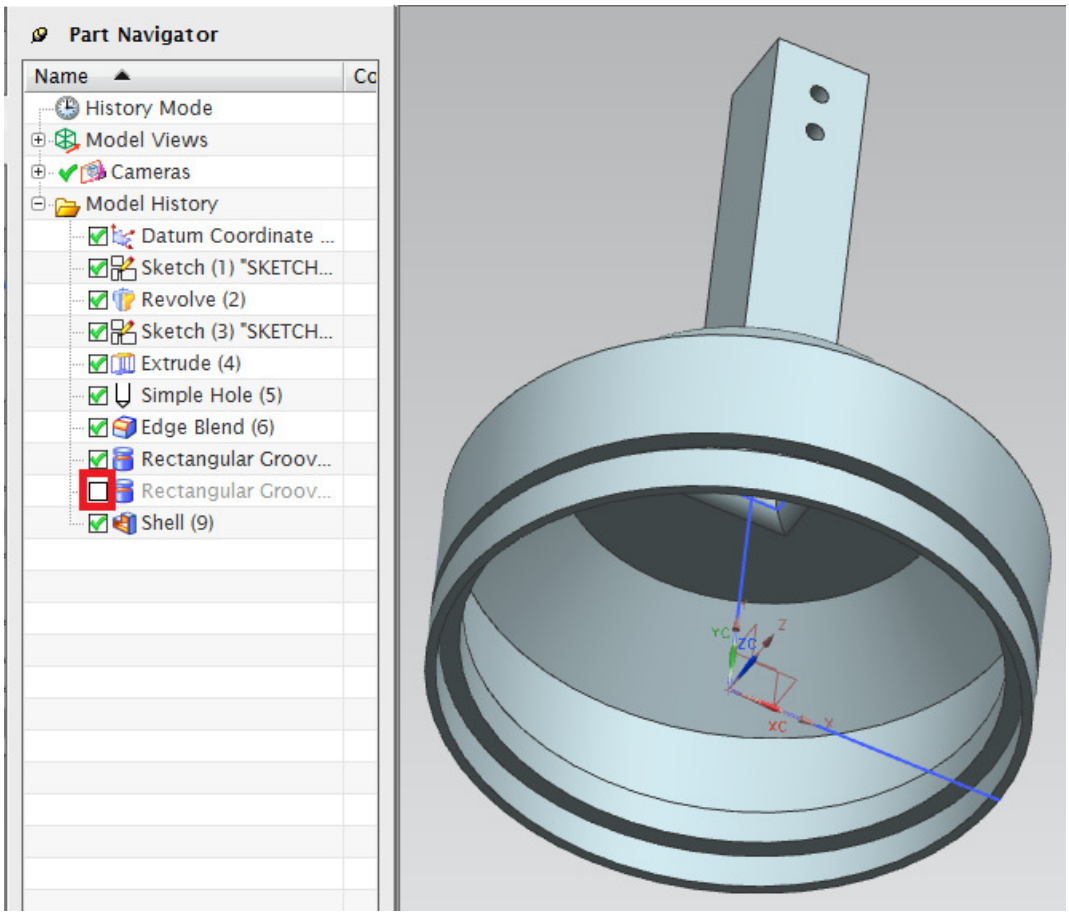

Figure 34 - The Part Navigator

Wrapping Up

You should now be able to draw fully constrained parts that use multiple features including sketches on part surfaces.

Copyright 2010, Missouri S&T

Assignment

Draw the part shown in this tutorial. Use the dimension values included in the steps. The following point distribution will be used:

- Base sketch and revolution (2)
- Rectangular extension (2)
- Holes (2)
- Edge blend and shell (2)
- Grooves (2)

Copyright 2010, Missouri S&T