SOLID EDGE
VELOCITY SERIES

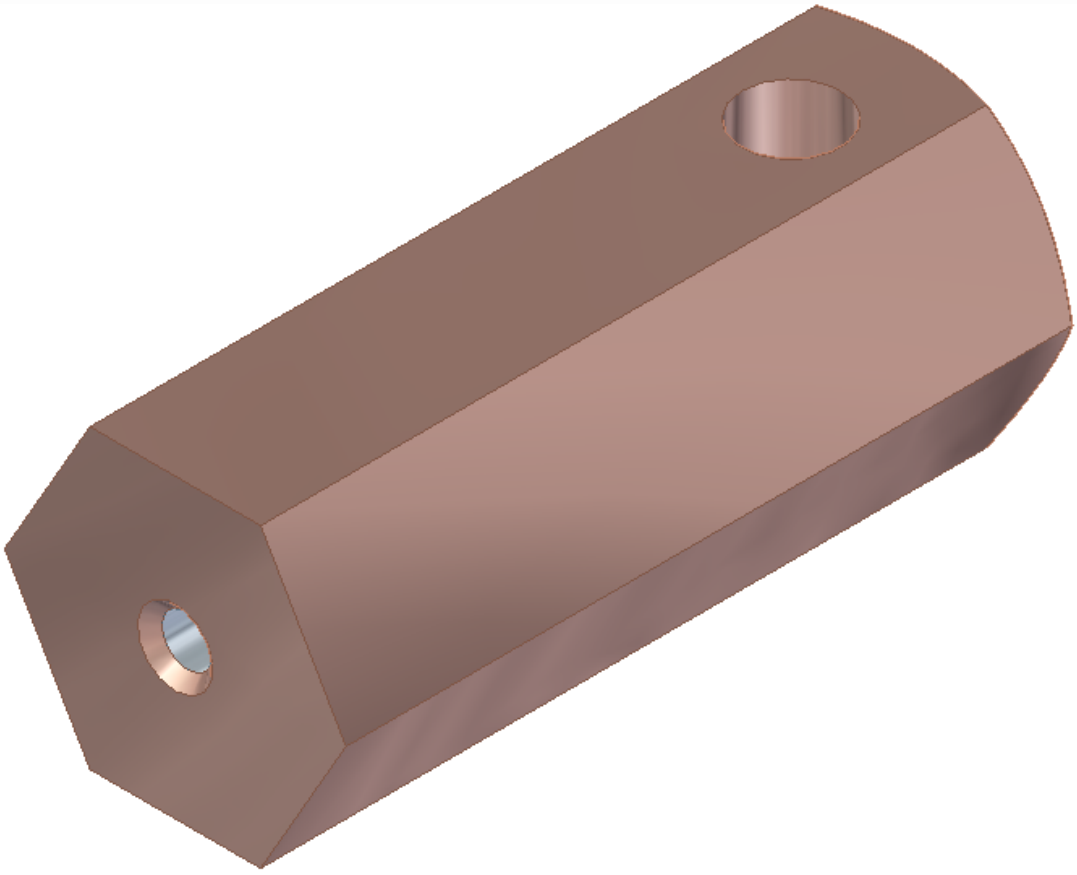

Tutorial: ***Boiler***

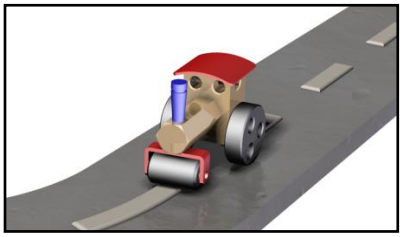

Project: ***Roadroller (Synchronous)***

cad / cam / pdm / cae | CAAP®

Solution Partner PLM | SIEMENS

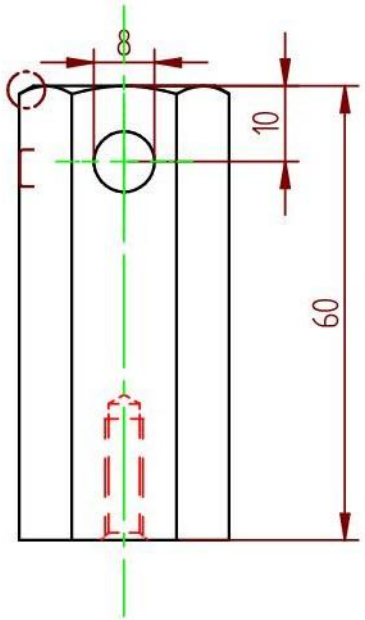

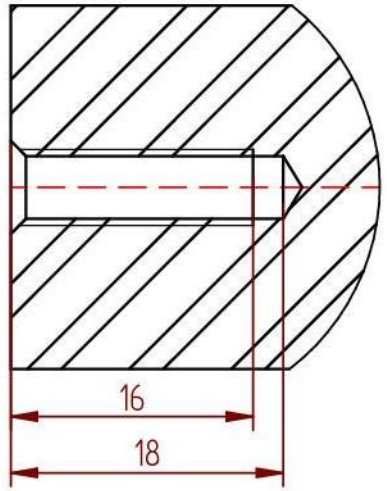

DETAIL B

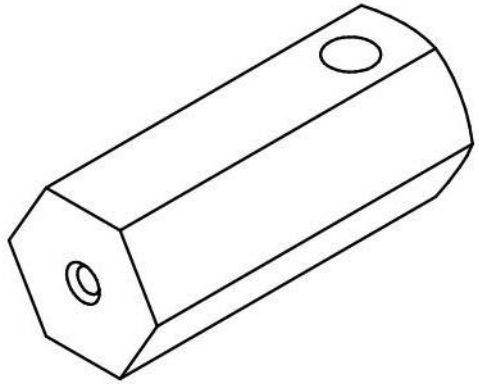

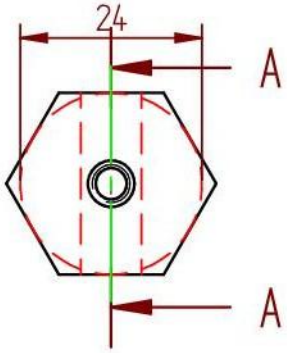

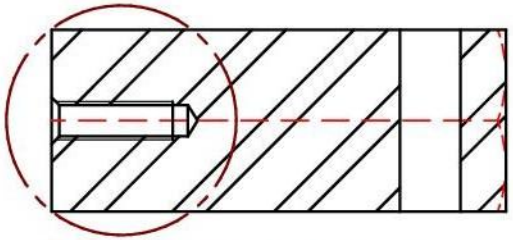

SECTION A-A

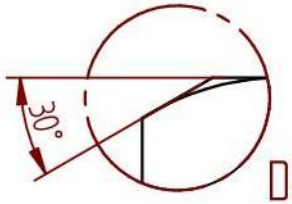

DETAIL C
5:1

AMERICAN PROJECTION	SCALE : 1:1	AUTHOR : Ruben	CAAP Hamersweldseweg 65 3833 GL Leusden +31(0)33-4573322 www.caap.nl
	DIMENSION UNITS : MM	CLASS (DEPARTMENT) : -	
	DATE : 22-8-2011	CHECKED BY: -	

MATERIAL : Steel	TITEL : Boiler	NUMBER : 1003	REV: A	SIZE: A4
PROJECT: Roadroller				

1 +	1. Start **Solid Edge.** 2. Click on **<u>ISO Part.</u>** 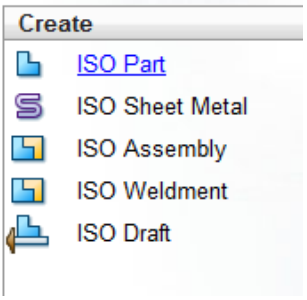	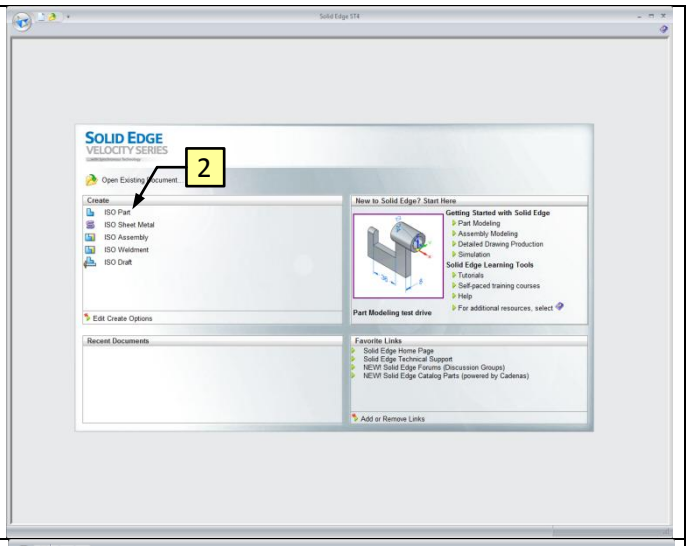
2	1. Click the **Polygon by Center** button. 2. Point at the **Origin** and wait until the icon appears before clicking.	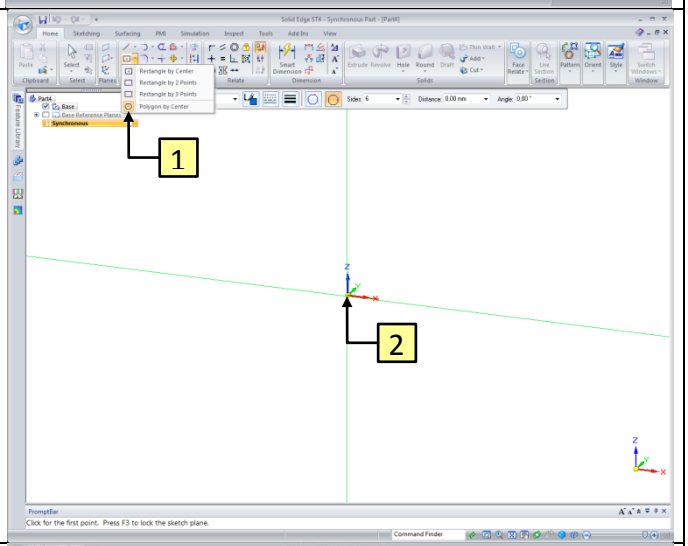
3	3. Make sure the polygon is perpendicular to the Y-axis. As shown with the dotted line. Click to place the polygon.	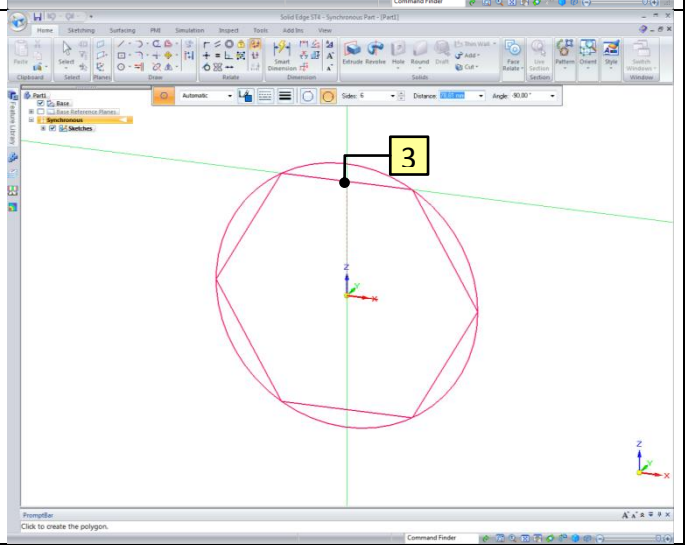

4	1. Click the **Horizontal/Vertical** button. 2. Click on the horizontal line.	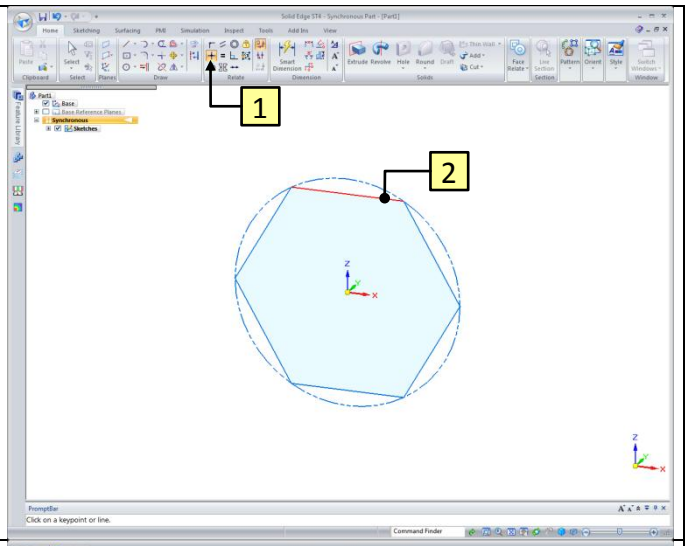
5	1. Click the **Select** button. 2. When you hover over the Region it will turn red. Click on the Region, as shown.	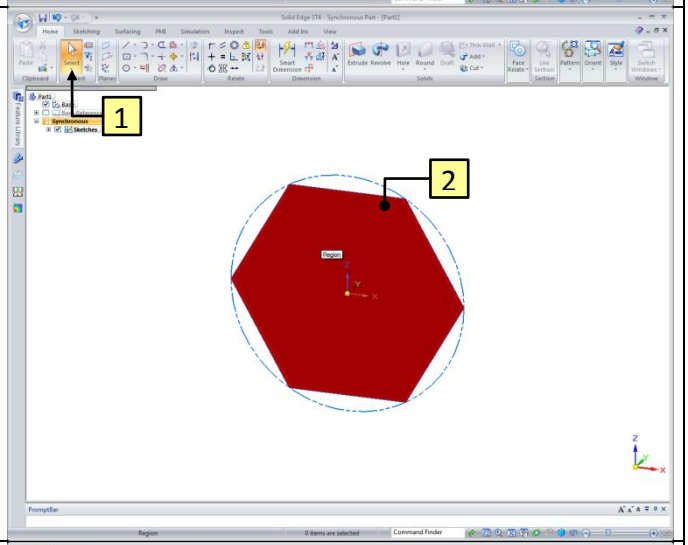
6	3. When you hover over the arrow it will turn red. Click on the arrow, as shown. 4. Click the **Extrude – Symmetric** button.	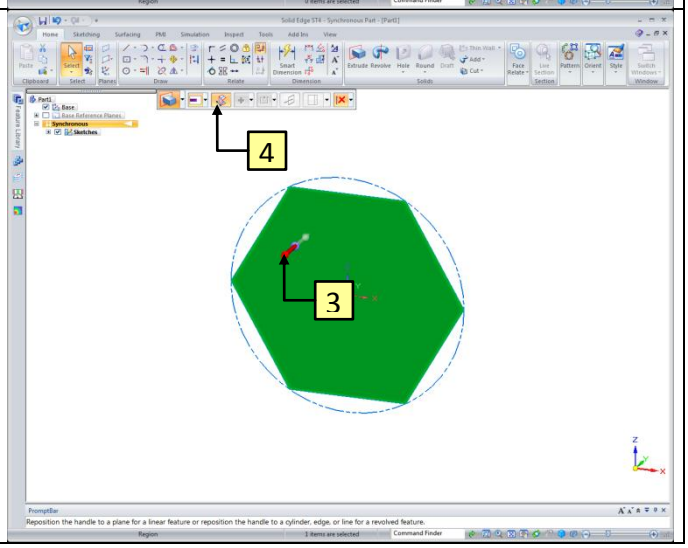

7	5. Key in the value **42** and confirm with **Enter**.	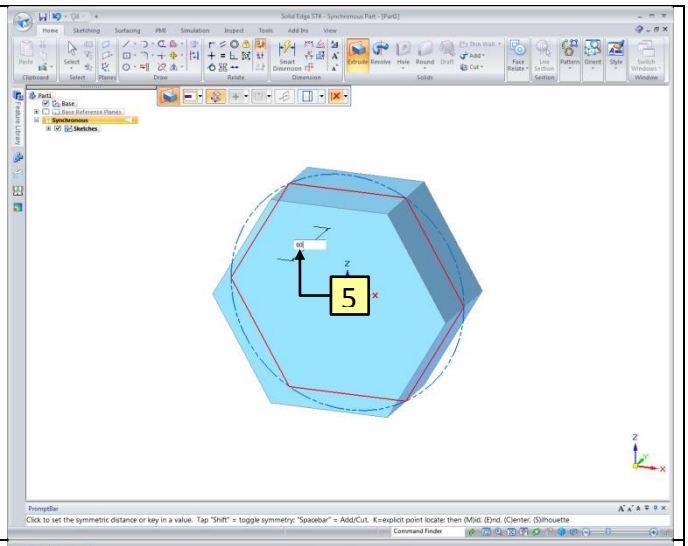
8	1. Click the **Smart Dimension** button. 2. Click on the edge of the polygon, as shown. 3. Click on the horizontal line. 4. Click to place the dimension.	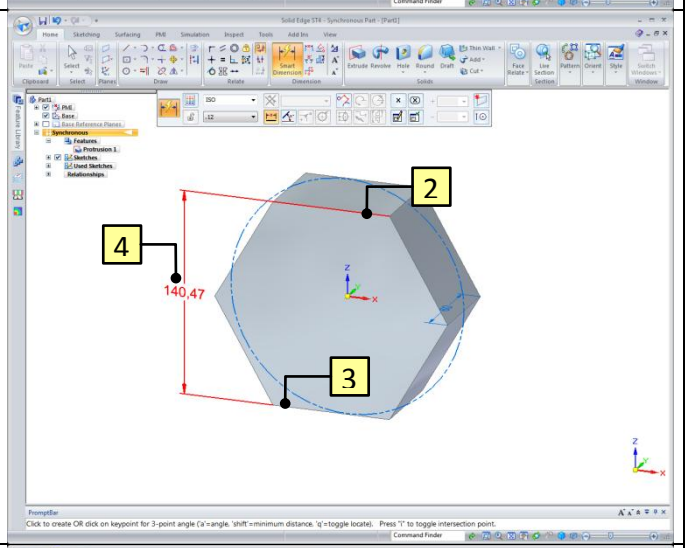
9	5. Key in the value **24** and confirm with **Enter**.	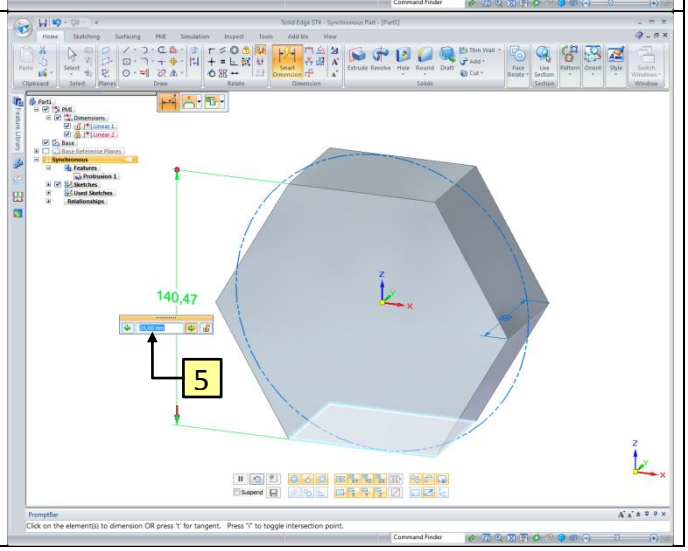

10 + 	1. Click the **Hole** button. 2. Click the **Hole Options** button.	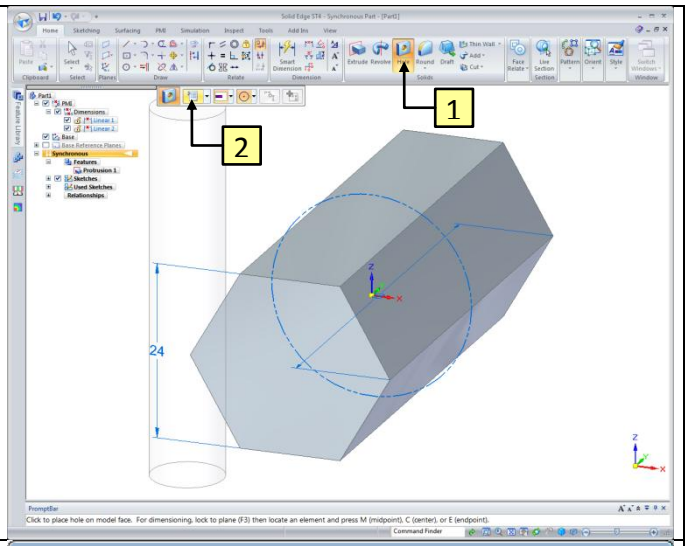
11 	Fill in the Hole Options, as shown. 1. Type: **Threaded**; 2. Thread: **M5**; 3. Finite extent: **16**; 4. Extents: **Finite extent**; 5. Hole depth: **18**; 6. V bottom angle: **yes**; 7. Click the **OK** button**.**	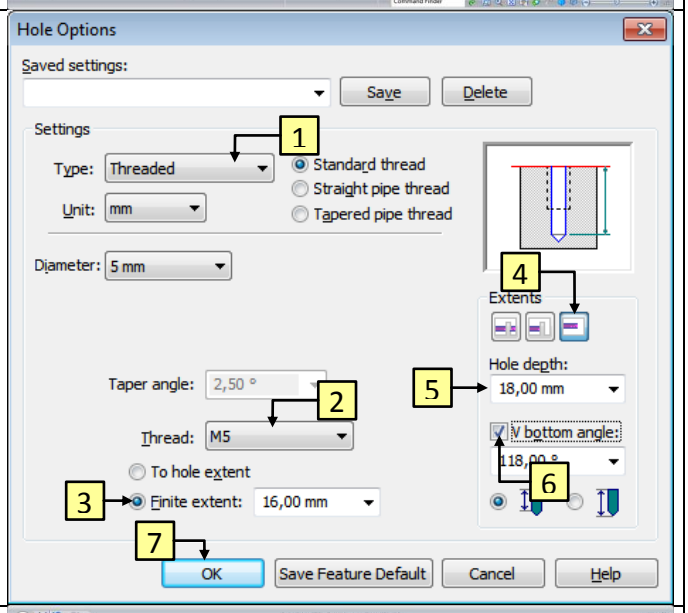
12 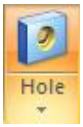	1. Hold the cursor on the edge of the cylinder as shown, wait until the icon appears and click. The Hole will centre automatically.	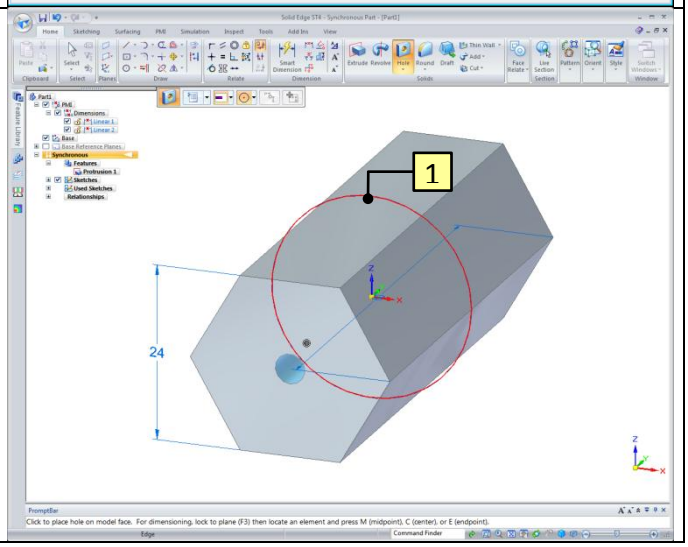

13 +	1. Click the **Circle by Center Point** button. 2. When you hover over the plane, it will turn red. Click on the plane lock icon.	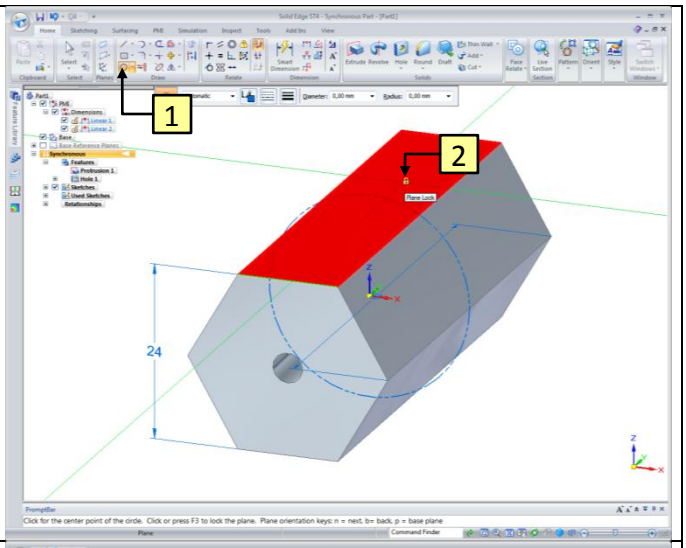
14	1. Rotate the view. 2. To place the centre of the circle, click on the plane. 3. Click for the diameter.	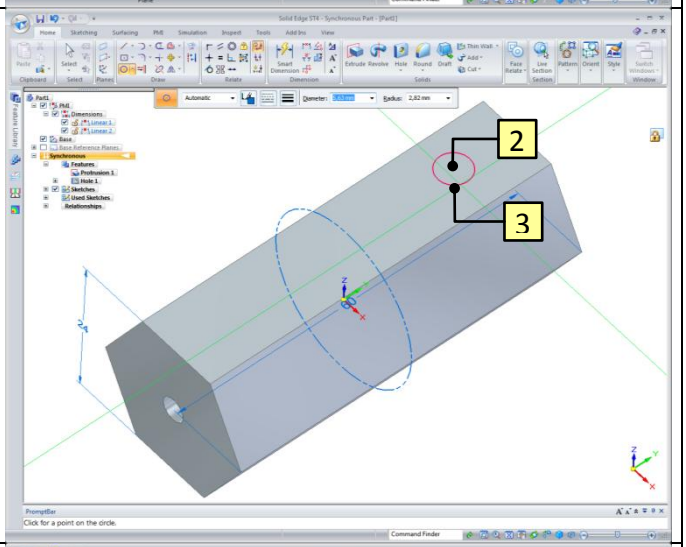
15	1. Click the **Select** button. 2. When you hover over the Region, it will turn red. Click on the Region, as shown.	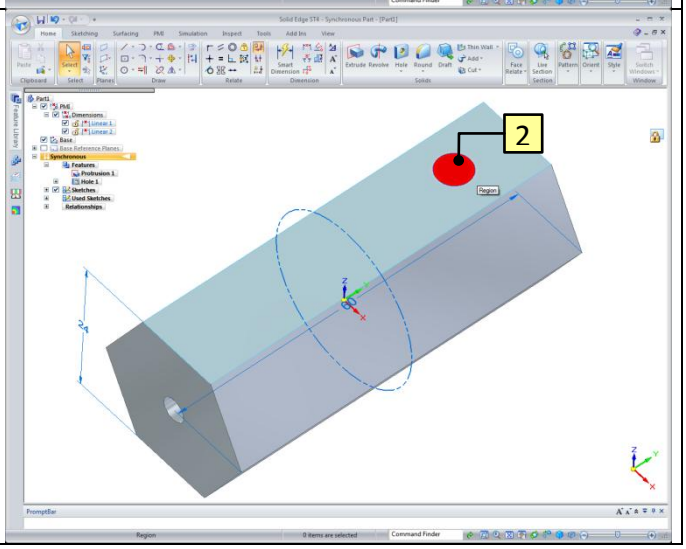

16	3. When you hover over the arrow, it will turn red. Click on the arrow, as shown. 4. Click the **Extrude – Symmetric** button.	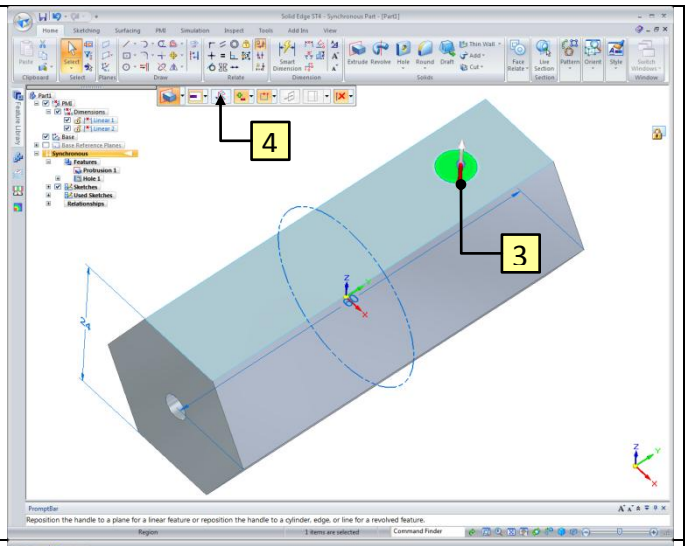
17	5. Drag the Cut through the part and click to confirm.	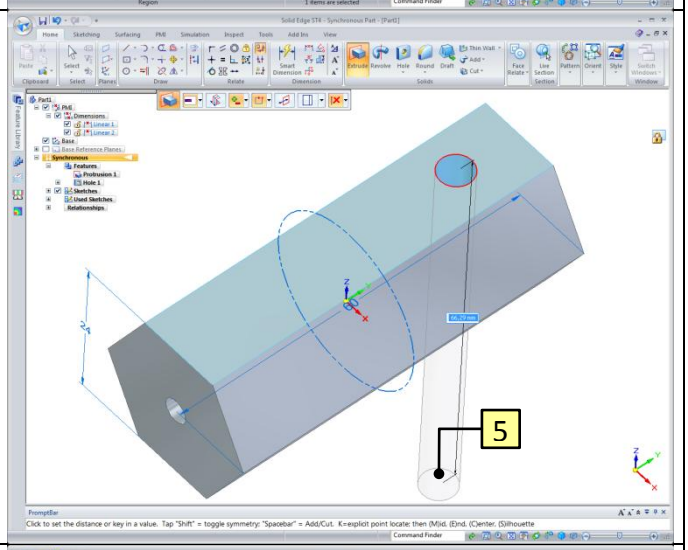
18	1. Click the **Smart Dimension** button. 2. Click on the edge of the Cut. 3. Click to place the dimension.	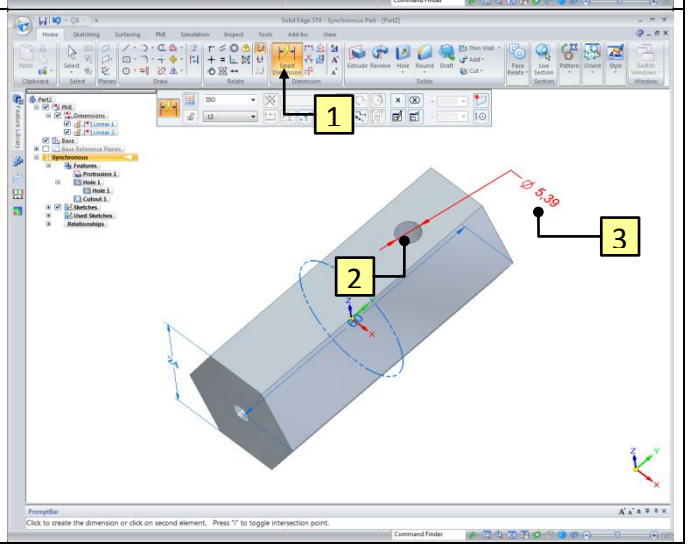

19 	4. Key in the value **8** and confirm with **Enter**.	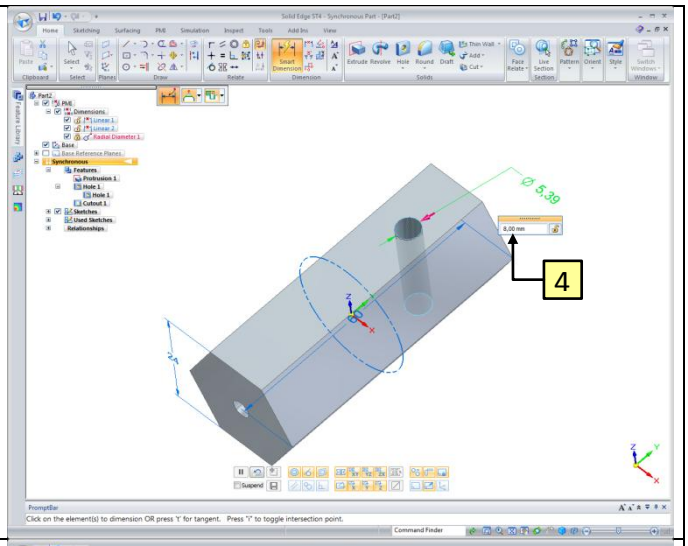
20 	If the **Smart Dimension** is still active. 5. Click on the edge of the Cut. 6. Click on the horizontal line. 7. Click to place the dimension.	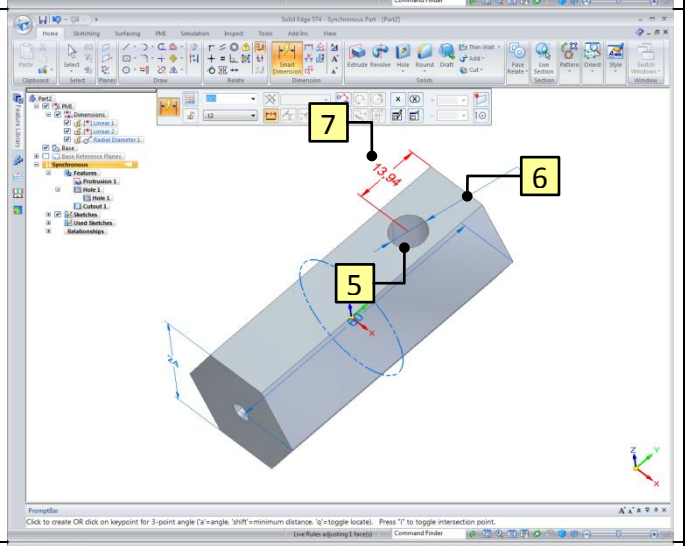
21 	8. Select the left green arrow to move the hole. 9. Key in the value **10** and confirm with **Enter**.	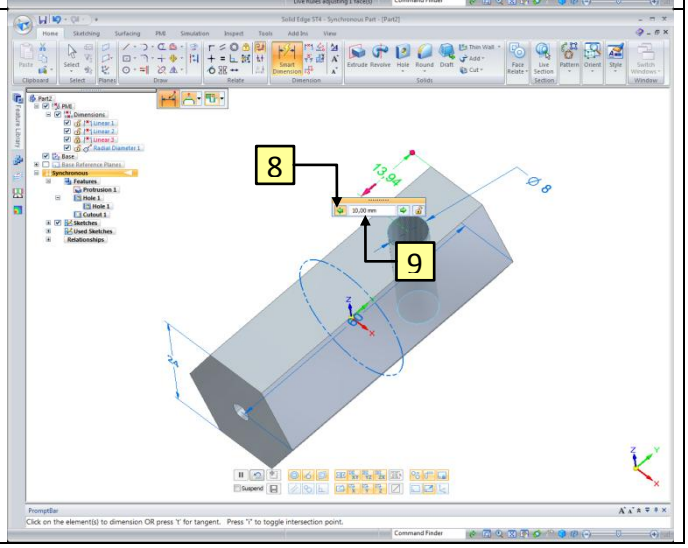

22	1. Click the **Select** button. 2. Click on the **Cut,** as shown.	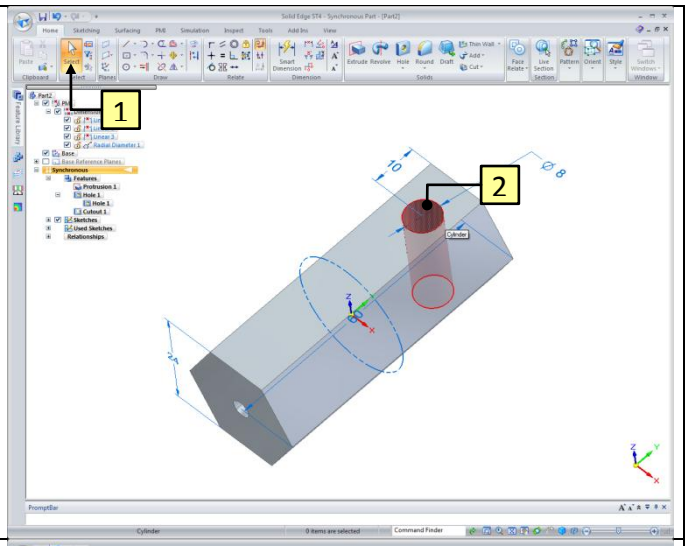
23	3. When you hover over the arrow, it will turn red. Click on the arrow, as shown.	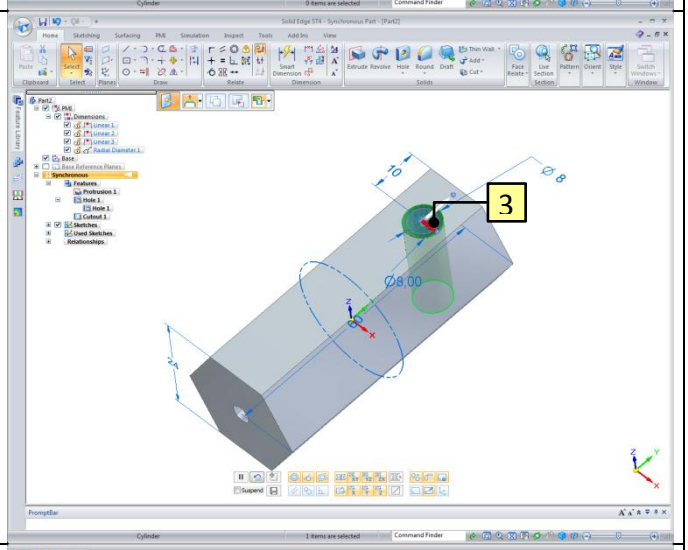
24 +	4. Click the **Midpoint** button.	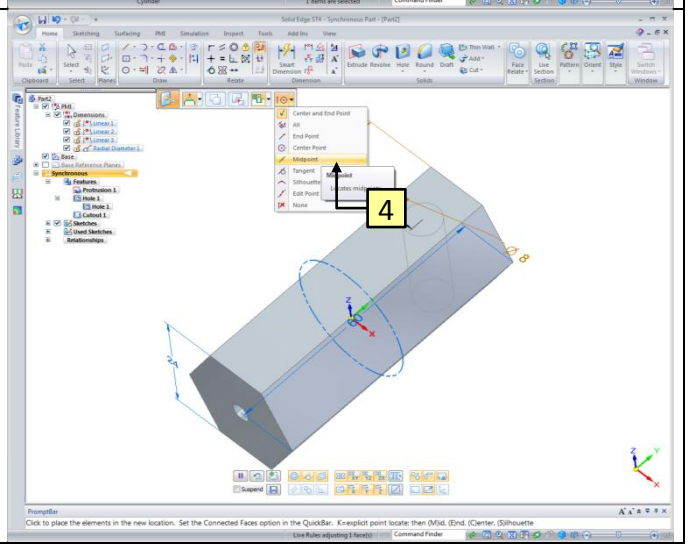

25	5. Point at the centre point of the horizontal line and wait until the icon appears before clicking.	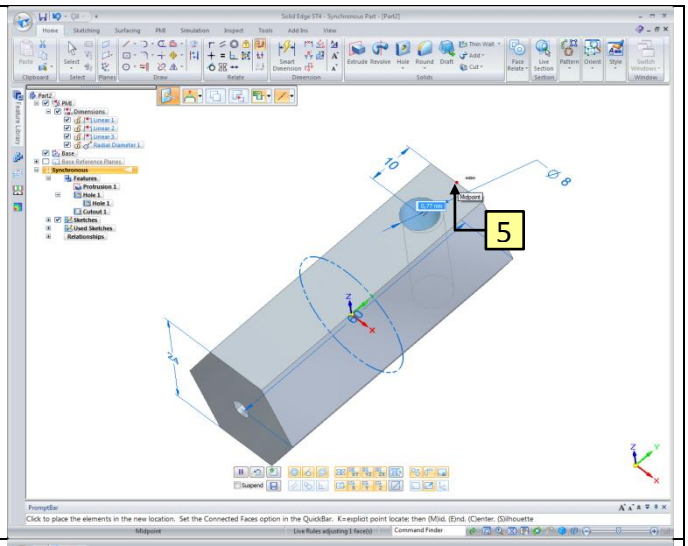
26	1. Click the **Line** button. 2. Click on the **Top (xy)** plane at de Reference Planes in the PathFinder.	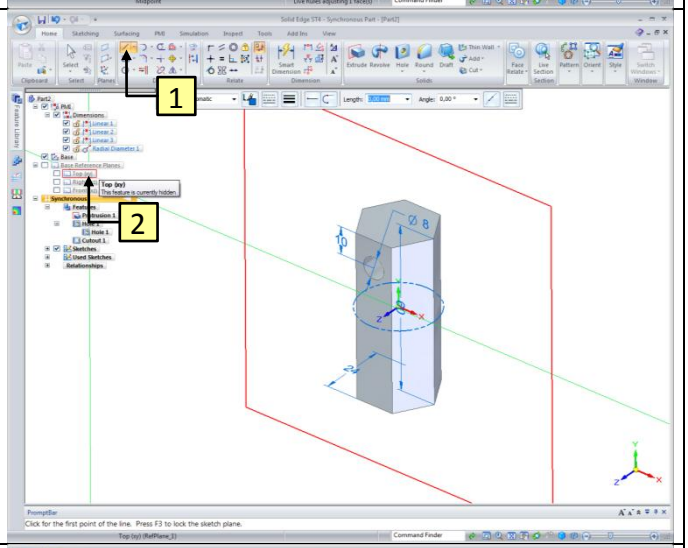
27	3. When you hover over the vertical line, it will turn red. Wait until the icon appears. Click on the vertical line.	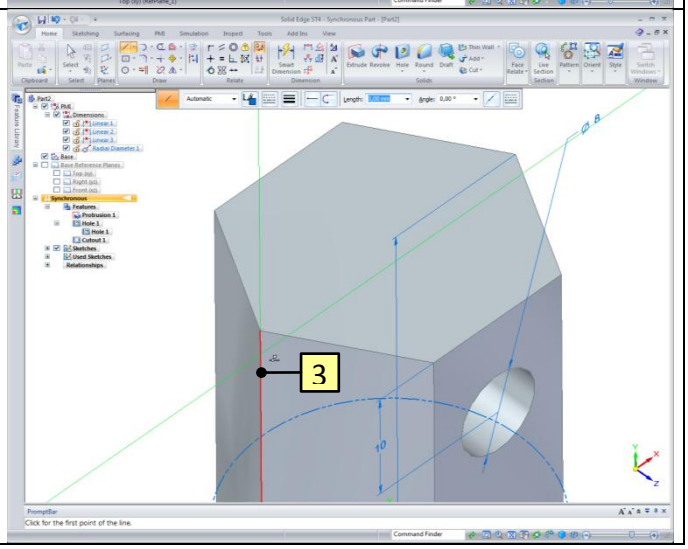

28	4. When you hover over the horizontal line, it will turn into a dotted line. Wait until the icon appears. Click on the horizontal line.	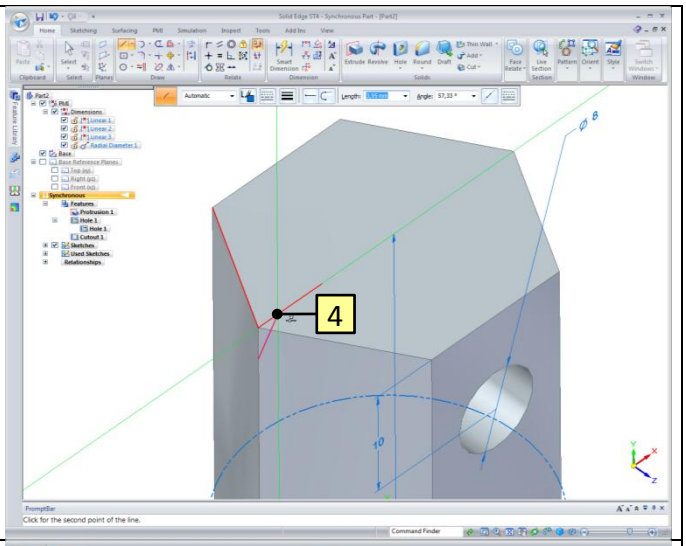
29	5. Finish the triangle, as shown. Wait until the icons appears before clicking.	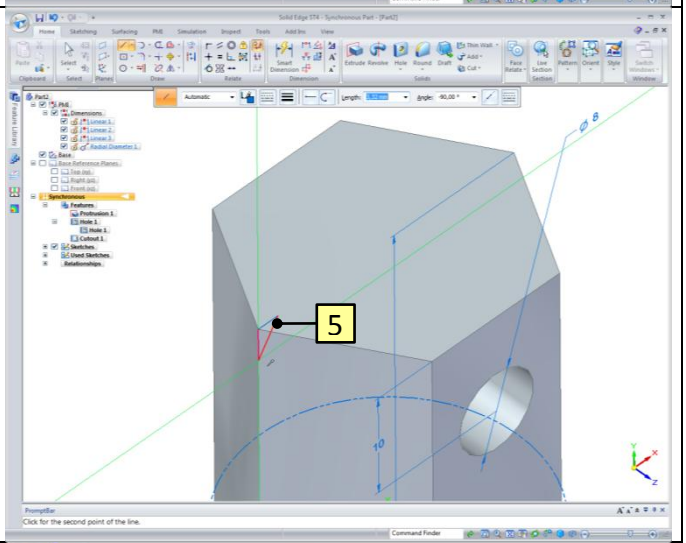
30	1. Click the **Select** button. 2. Point the cursor on the triangle and wait until a mouse icon appears. Click the RMB to open the quickpick.	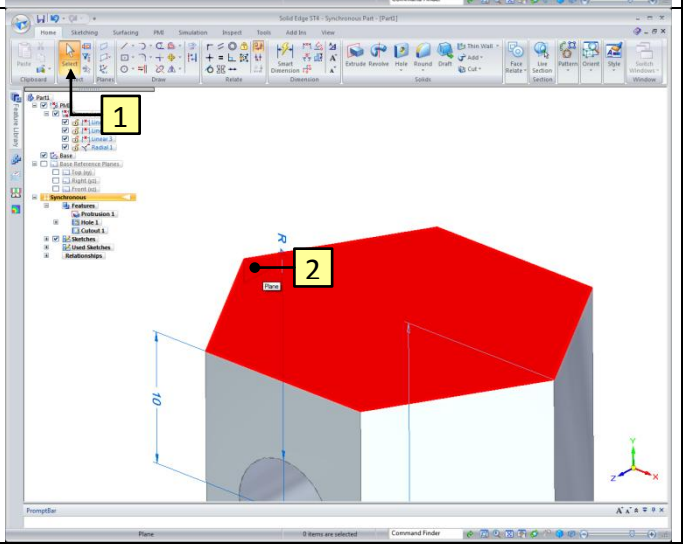

31	3. Select the Region in the Quickpick.	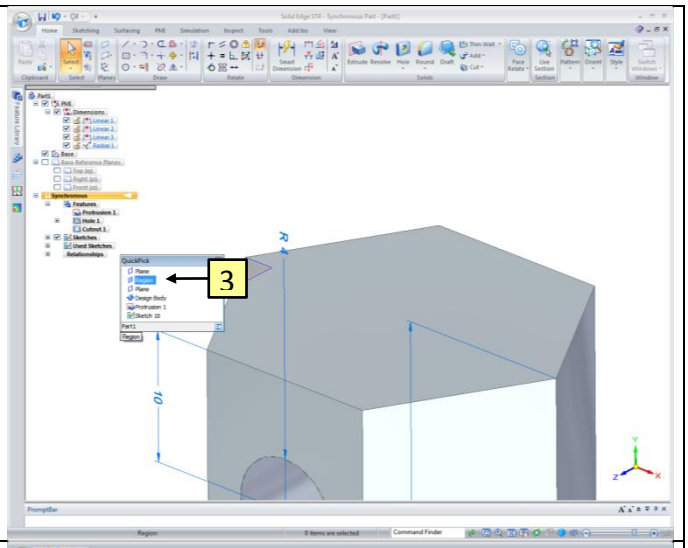
32	4. Click the **Revolve** button.	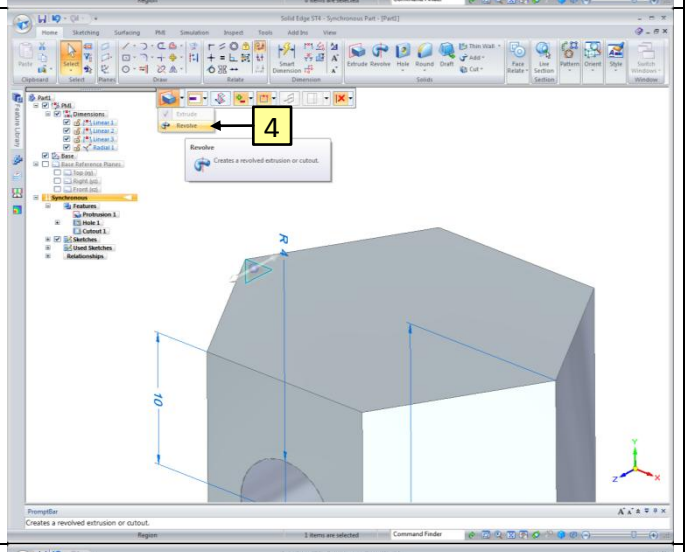
33	5. Click on the blue point of the Steering Wheel. 6. Click on the Y-axis arrow to place the Steering Wheel.	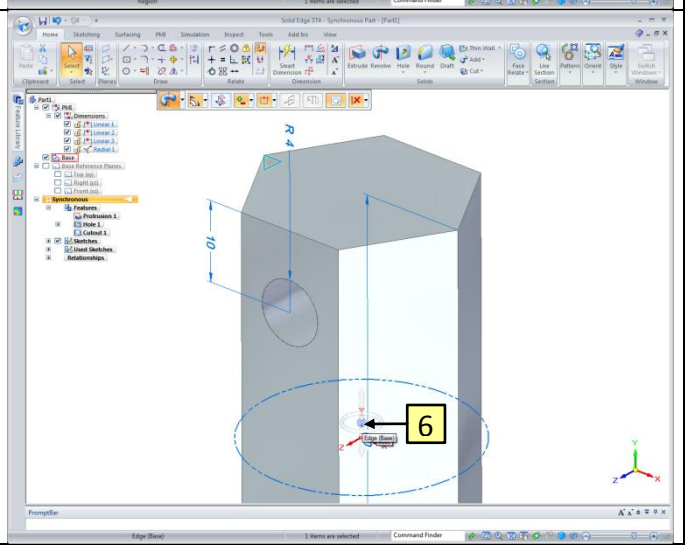

34	7. Click the **360** button.	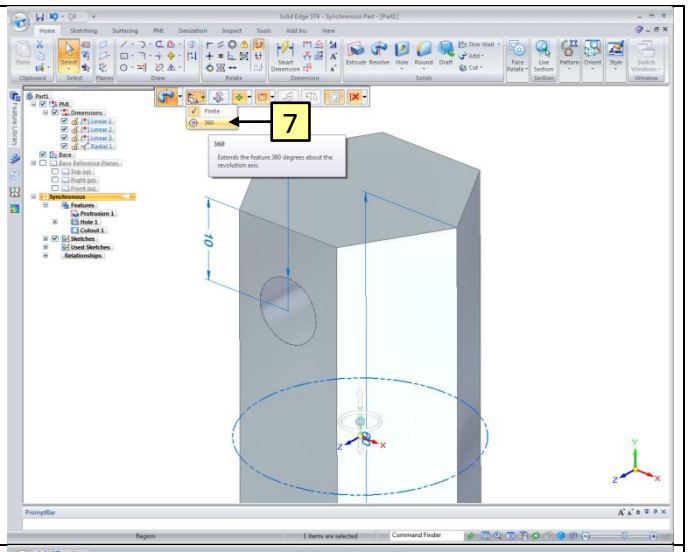
35	8. Click the **Remove** button.	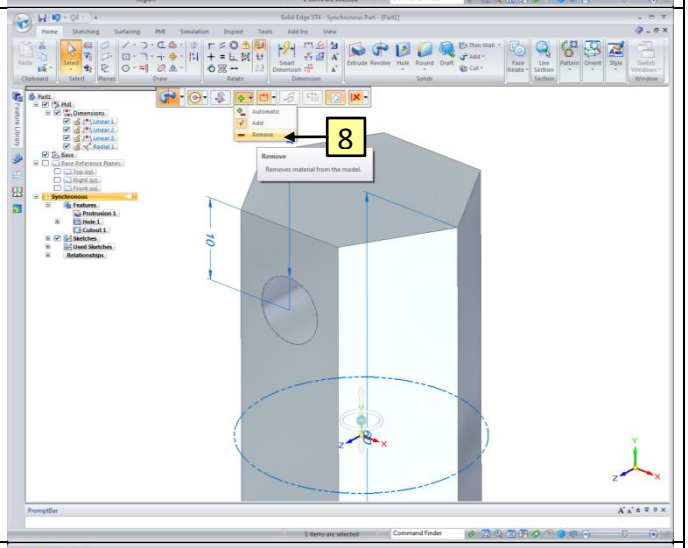
36	9. When you hover over the **Torus** of the Steering Wheel, it will turn red. Click on the **Torus**, as shown.	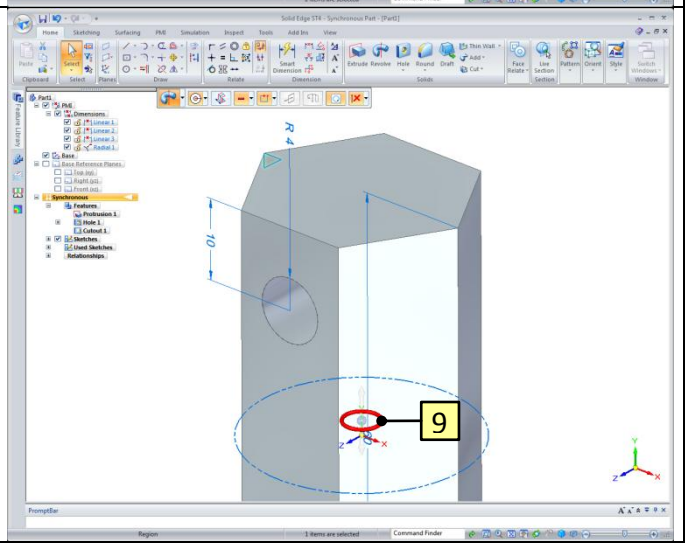

37	1. Click the **Angle Between** button. 2. Click on the horizontal line. 3. Click on the slanted line.	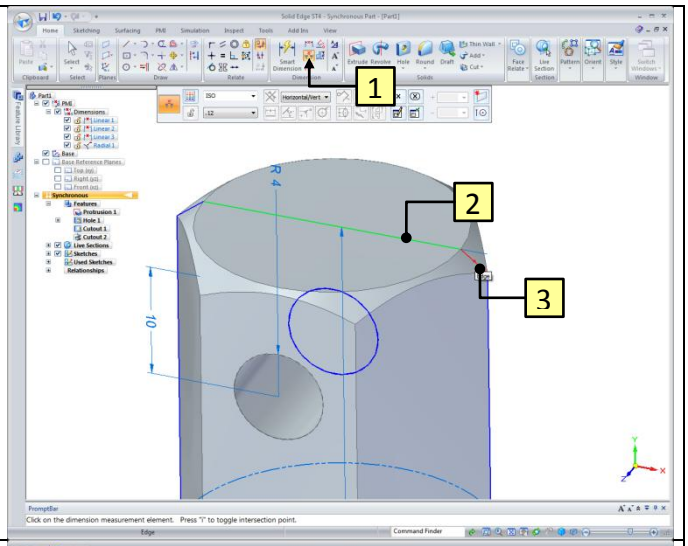
38	4. Click to place the dimension.	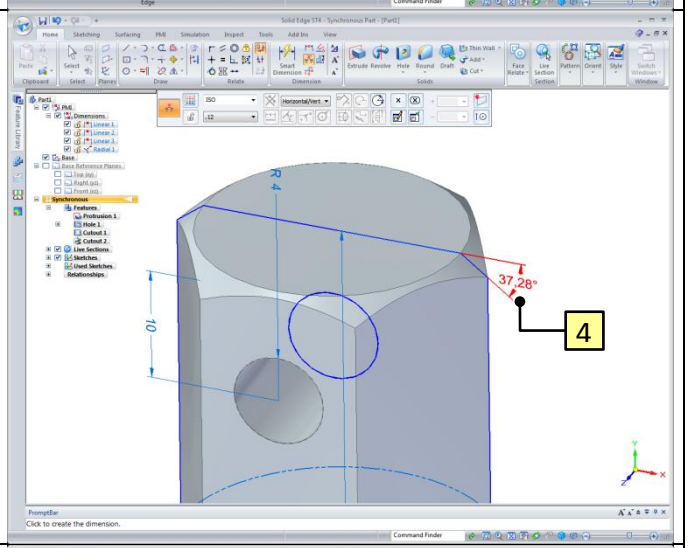
39	5. Make sure the left green arrow is selected. 6. Key in the value **30** and confirm with **Enter**.	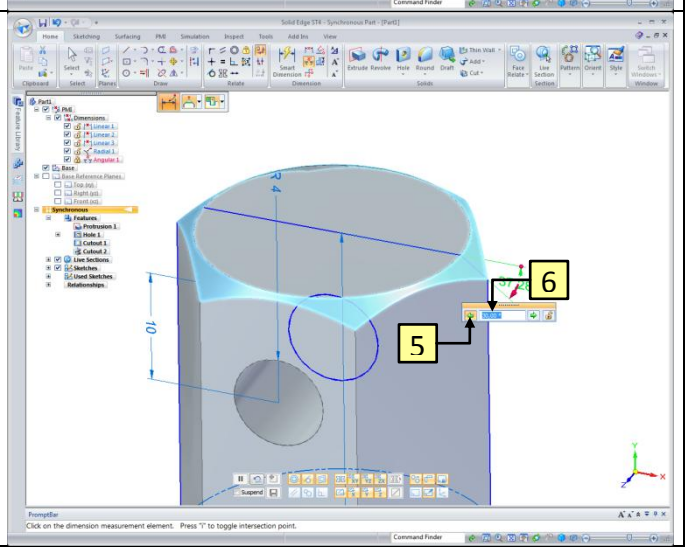

40	1. Click the **Distance Between** button. 2. Point at the left end point of the slanted line, as shown. Wait until the icon appears before clicking.	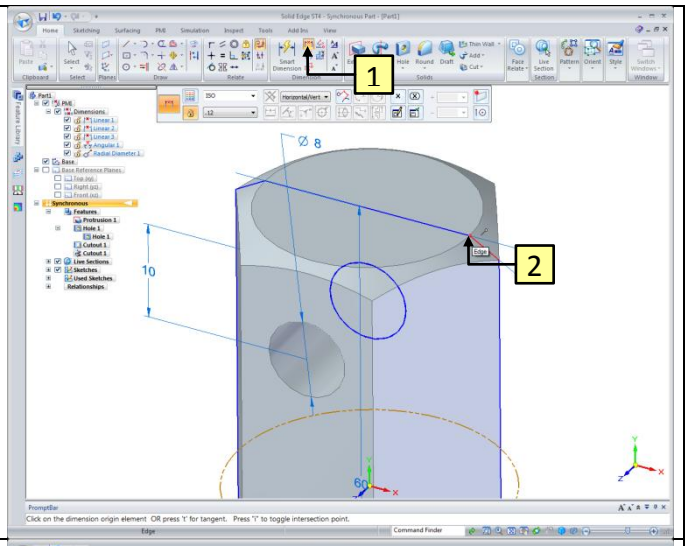
41	3. Click on the **Y-axis**. 4. Click to place the dimension.	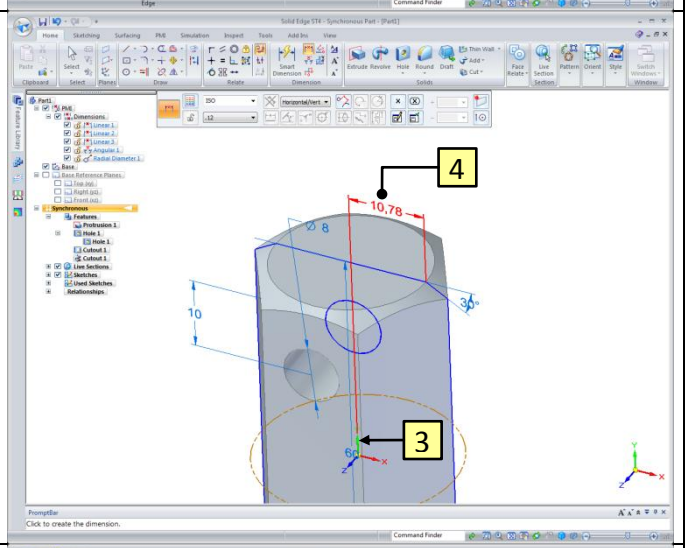
42	5. Key in the value **12** and confirm with **Enter**.	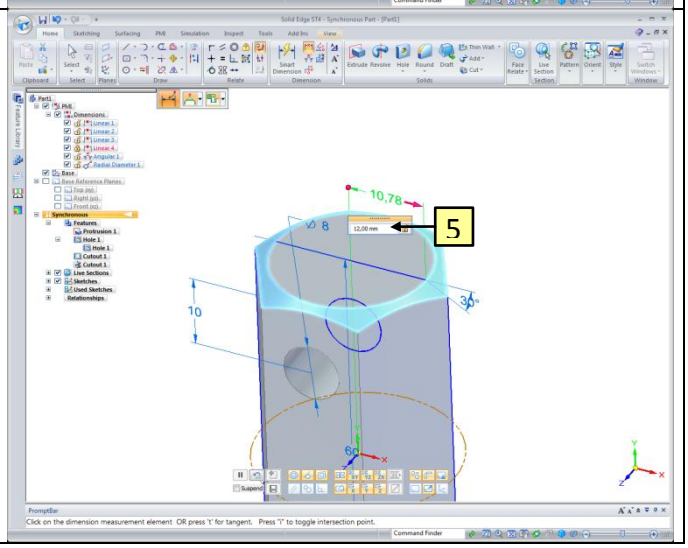

43	1. Press **Ctrl + i** to turn the view to isometric view. 2. Click the **Chamfer Equal Setbacks** button.	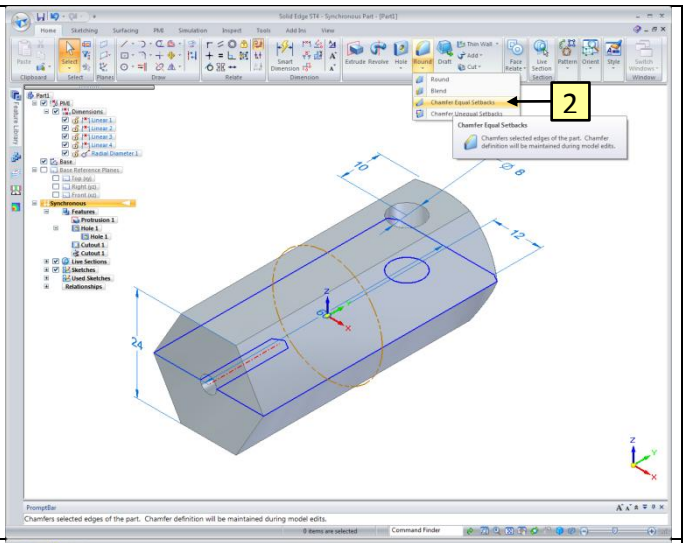
44	3. Click on the edge, as shown. 4. Key in a value for the chamfer (in this case **1**) and confirm with **Enter**.	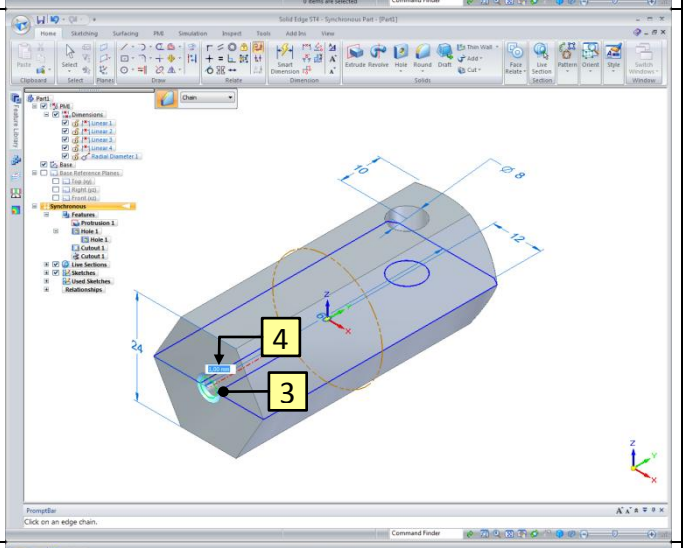
45	Now we set the material property. 1. Click the **Application Button**. 2. Click on **Properties**. 3. Click the **Material Table**.	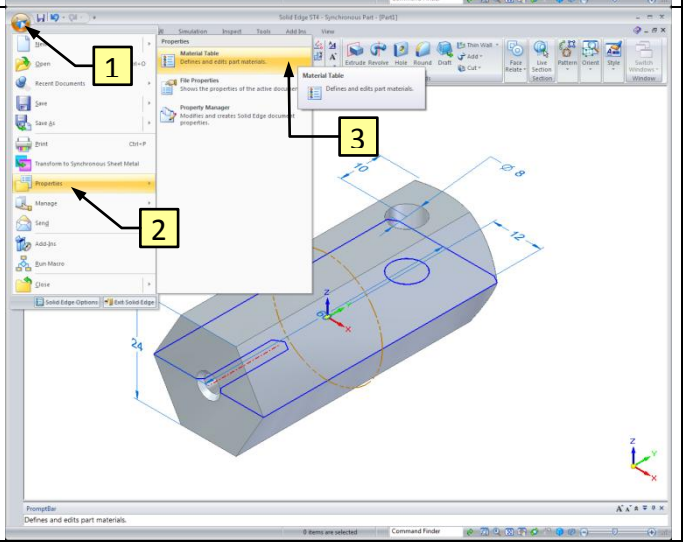

46

1. Choose the material **Steel**.
2. Click **Apply to Model** to set the material to the part.

Hint:

There are several properties which are connected to a material, like color en density. The density is necessary to determine the weight.

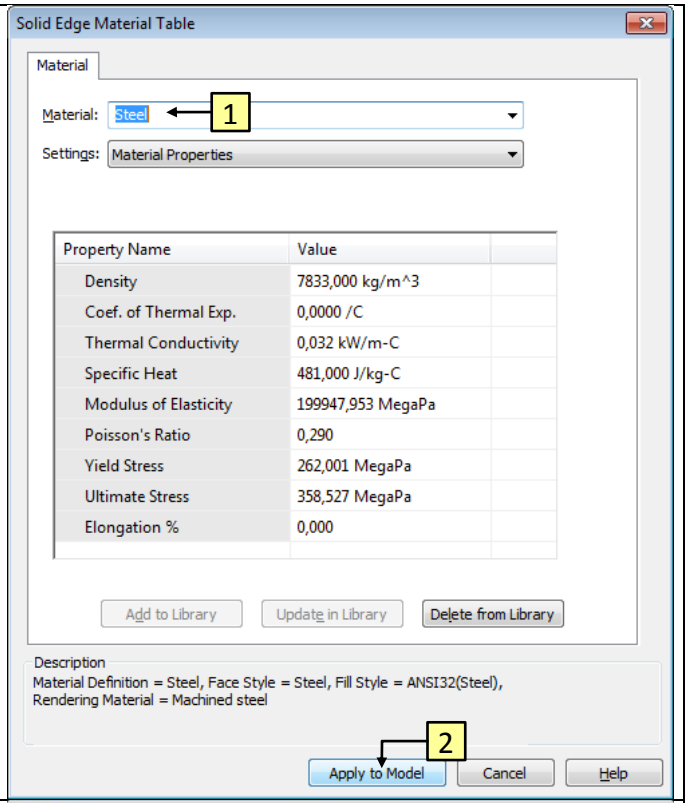

47

Now we can paint the part.

1. Click on **View → Part Painter**.

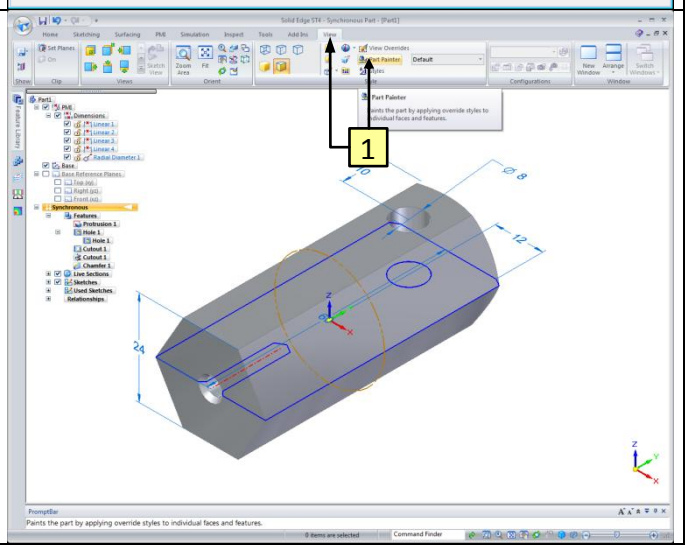

48	1. Select the style **Copper**. 2. Click on the part. 3. Click the **Close** button. ***Hint:*** *If you don't get the follow message at step 49, please set the default settings again.*	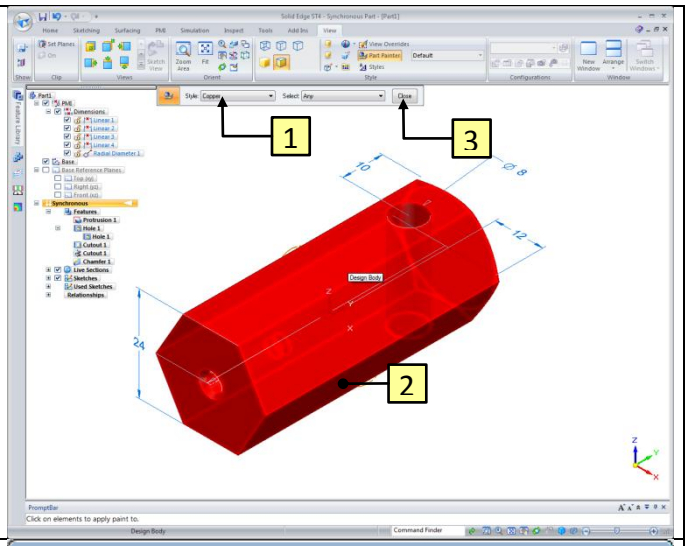
49	The part is ready. Now it must be saved. 1. First press **Ctrl** and **i** to turn the image to isometric view. 2. Click on the floppy icon. 3. Go to the **Summary** tab**.** 4. Type *Boiler* at Title. 5. Go to the **Project** tab and fill in the following properties: Document Number*: 1003*. Revision Number*: A*. Project Name: *Roadroller*. 6. Click **OK** to close the screen. ***Hint:*** *All properties of the part are saved at the **File Properties**. These properties will be used by making a drawing or part list.*	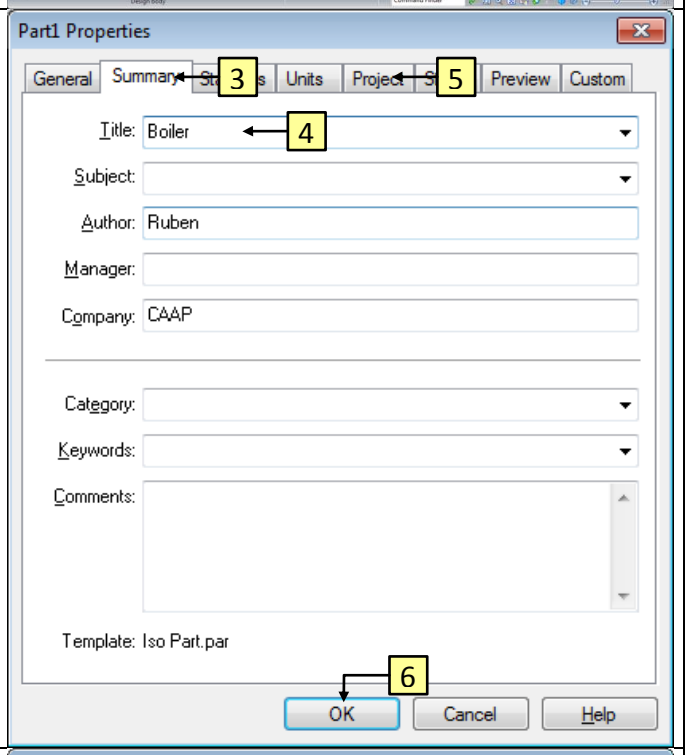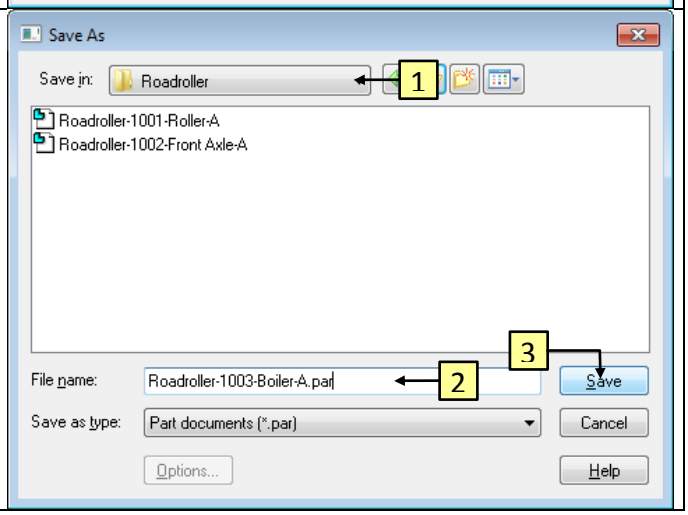
50	1. Browse to the folder *Roadroller*. 2. Save the document by name *Roadroller-1003-Boiler-A.par*. 3. Click the **Save** button. 4. Close the file. ***Hint:*** *Save all files of one project in the same folder.*