SOLID EDGE
VELOCITY SERIES

Tutorial: ***Rear Axis***

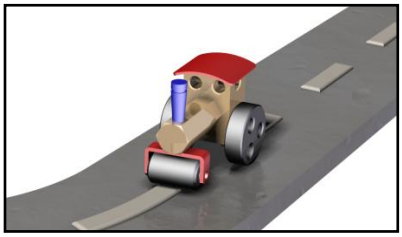

Project: ***Roadroller (Synchronous)***

cad / cam / pdm / cae | CAAP®

Solution Partner PLM | SIEMENS

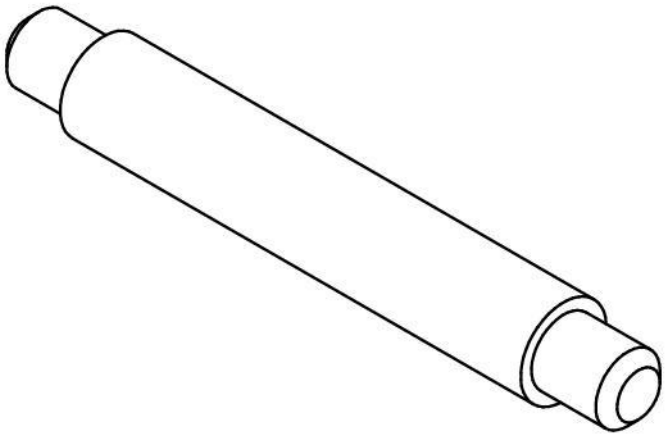

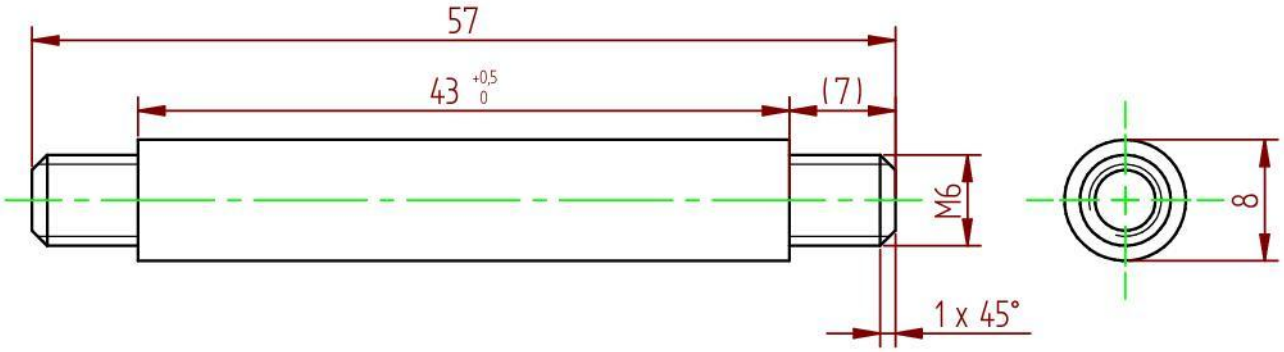

AMERICAN PROJECTION	SCALE : 2:1	AUTHOR : Ruben	CAAP Hamersveldseweg 65 3833 GL Leusden +31(0)33-4573322 www.caap.nl
	DIMENSION UNITS : MM	CLASS (DEPARTMENT) : -	
	DATE : 22-8-2011	CHECKED BY : -	

MATERIAL : Steel	TITEL :	NUMBER :	REV:	SIZE:
PROJECT: Roadroller	Rear Axis	1007	A	A4

1 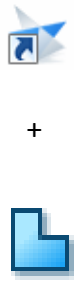	1. Start **Solid Edge.** 2. Click on **<u>ISO Part.</u>** 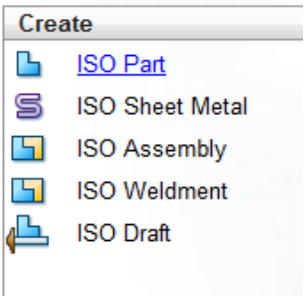	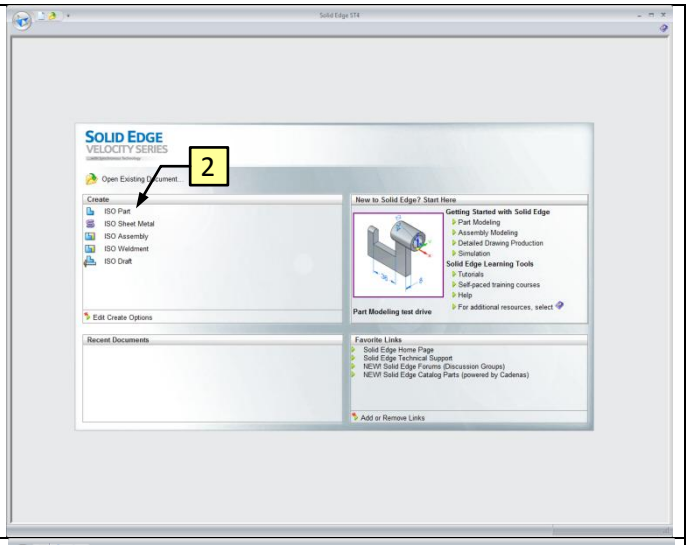
2	1. Click the **Line** button. 2. Draw the profile. Wait until the icons appears before clicking. Wait until the icon appears before clicking the end point to the begin.	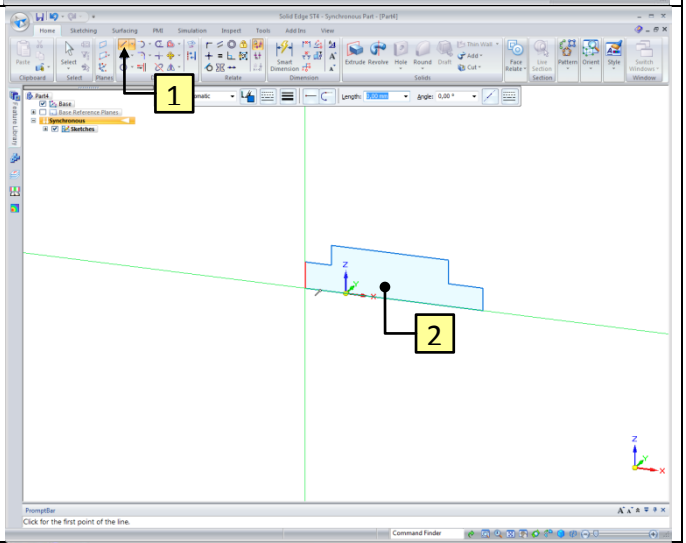
3	1. Click the **Select** button. 2. When you hover over the Region it will turn red. Click on the Region, as shown.	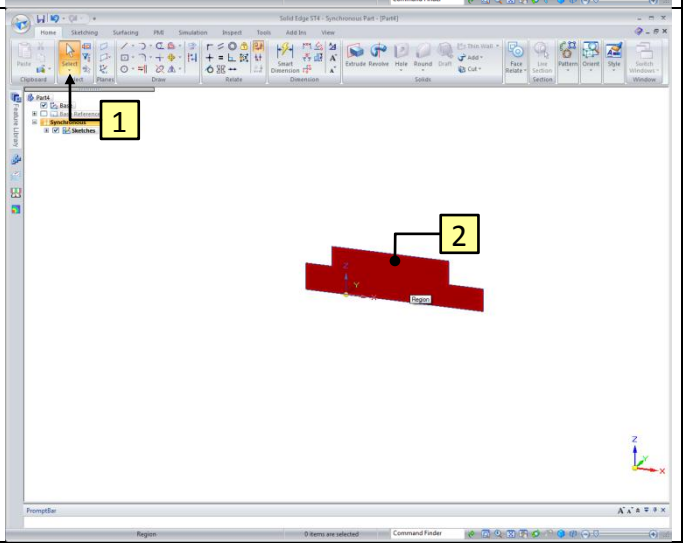

4	3. Click the **Revolve** button.	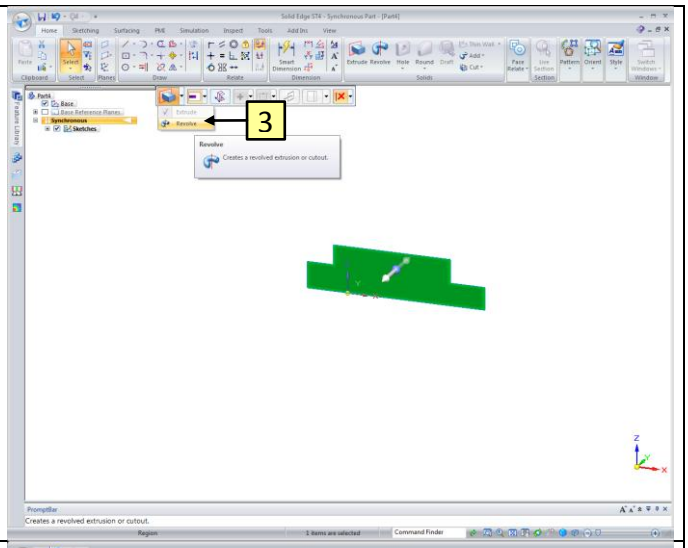
5	4. Click on the blue point of the Steering Wheel. 5. Point the cursor on the horizontal line and click to place the Steering Wheel.	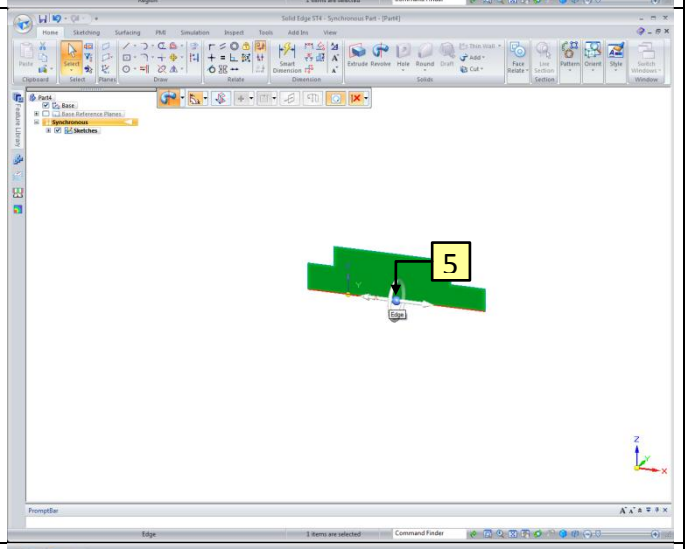
6	6. Click the **360** button.	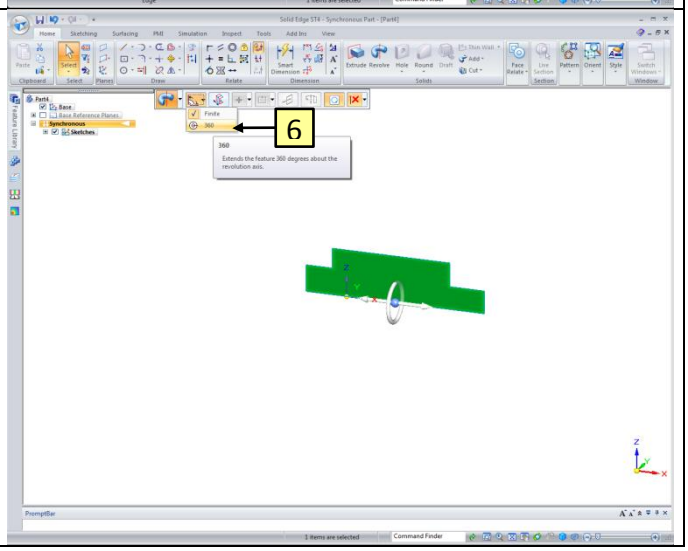

7	7. When you hover over the **Torus** of the Steering Wheel, it will turn red. Click on the **Torus**, as shown.	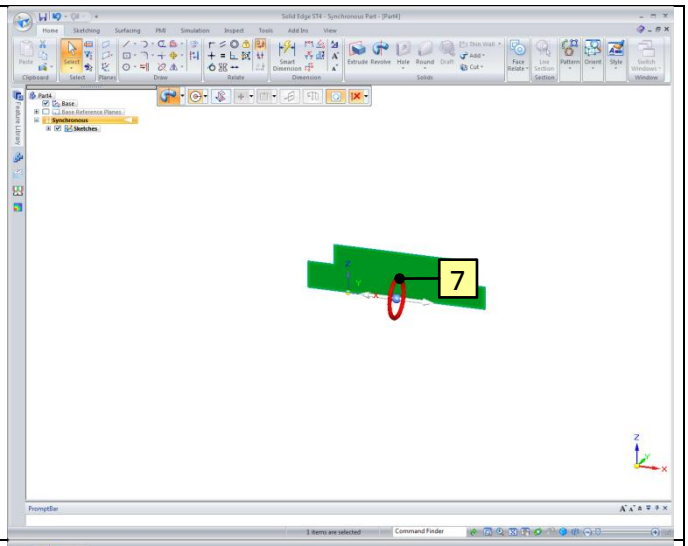
8	1. Click the **Smart Dimension** button. 2. Click on the vertical line. 3. Click on the other vertical line. 4. Click to place the dimension. 5. Make sure the right green arrow is selected. 6. Key in the value **43** and confirm with **Enter**.	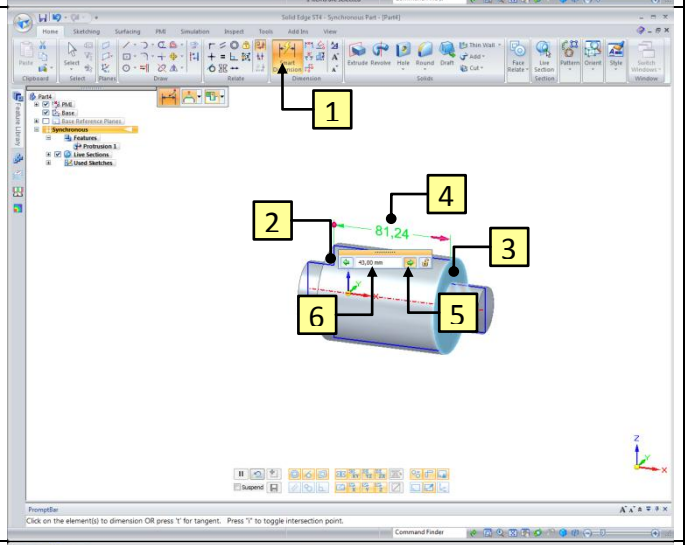
9	If the **Smart Dimension** is still active. 1. Click on the left horizontal line, as shown. 2. Click to place the dimension. 3. Make sure the left green arrow is selected. 4. Key in the value **7** and confirm with **Enter**.	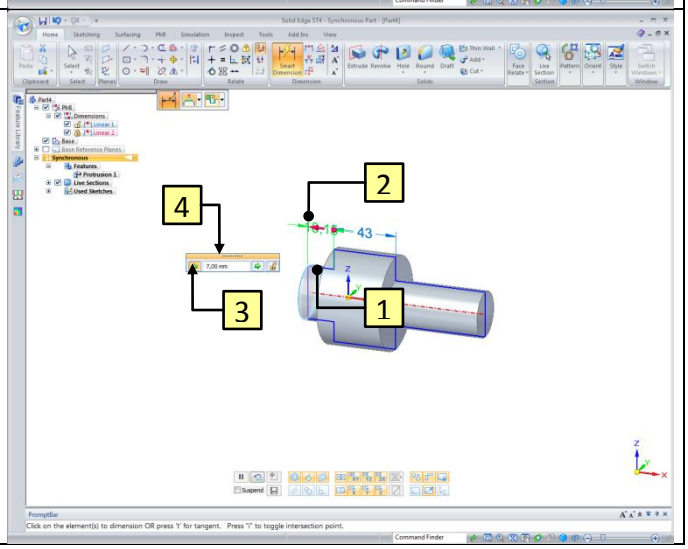

10	1. Repeat step 10 to the other side of the axis. Make sure the right green arrow is selected.	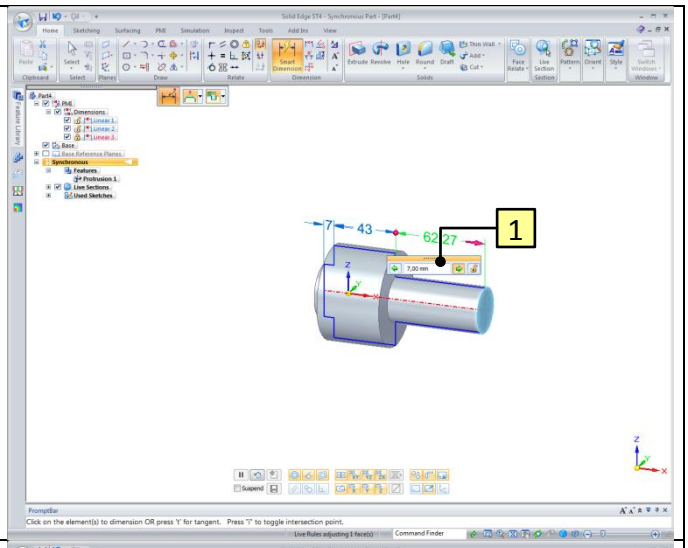
11	2. Click on the edge of the cilinder. 3. Click to place the dimension. 4. Key in the value **6** and confirm with **Enter**.	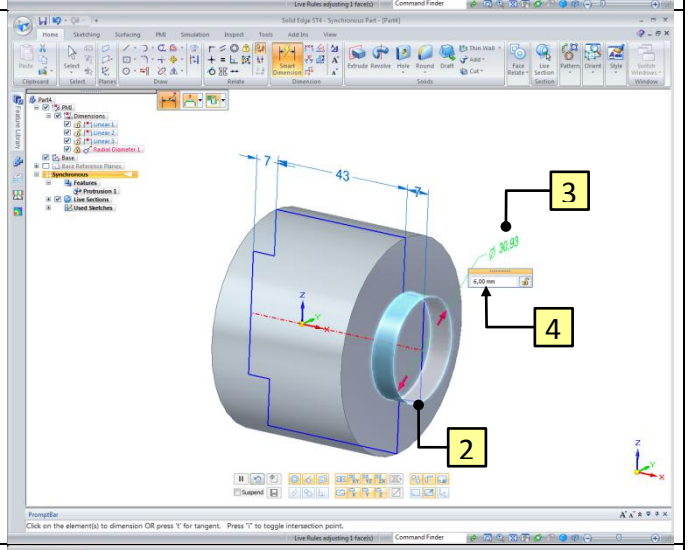
12	1. Click the **Equal Radius** button.	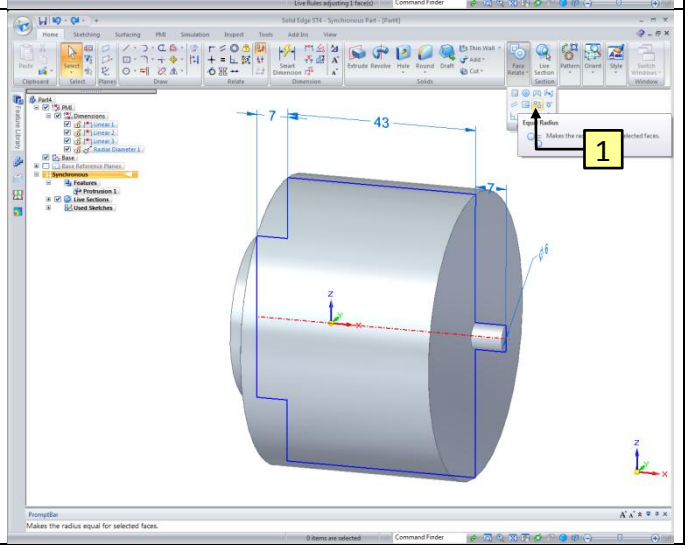

13 +	2. Click the left cilinder, as shown. 3. Click on the icon.	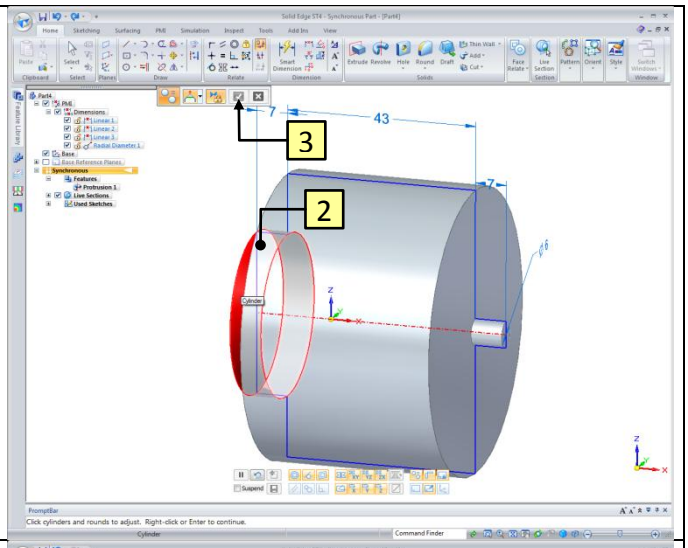
14 +	4. Click on the right cilinder. 5. Click on the icon.	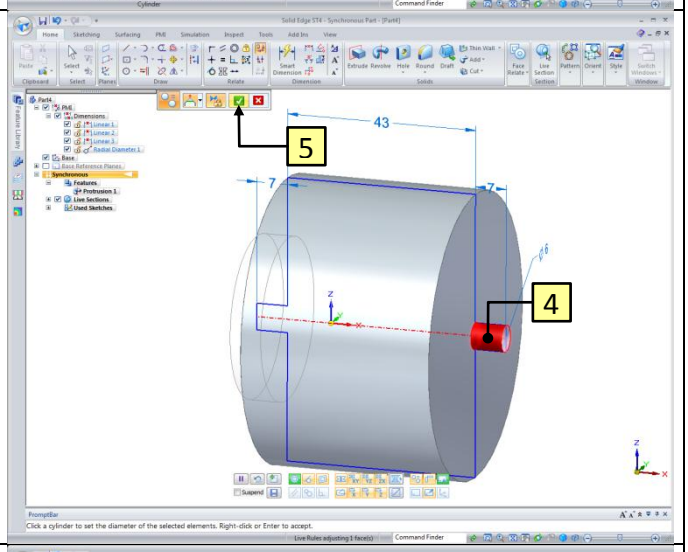
15	1. Click on the right edge of the cilinder. 2. Click to place the dimension. 3. Type **8** and confirm with **Enter**.	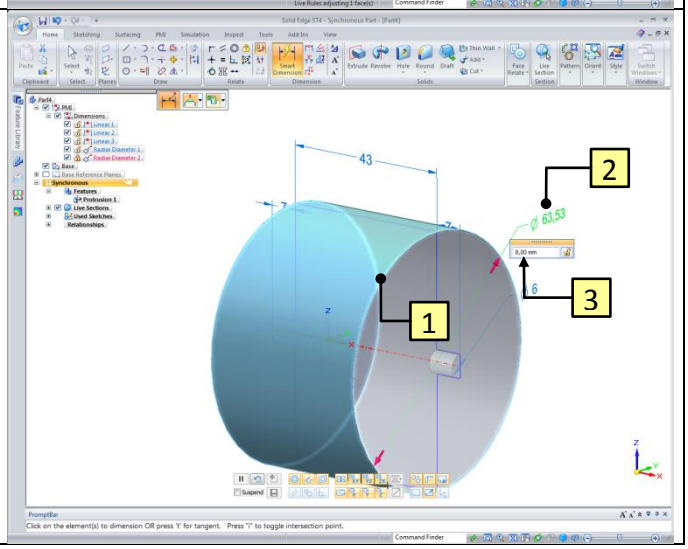

16	1. Click the **Select** button. 2. Click on **Protrusion** in the PathFinder. 3. Click on the blue point of the Steering Wheel. 4. Point at the middle of the axis to place the Steering Wheel. Wait until the icon appears before clicking.	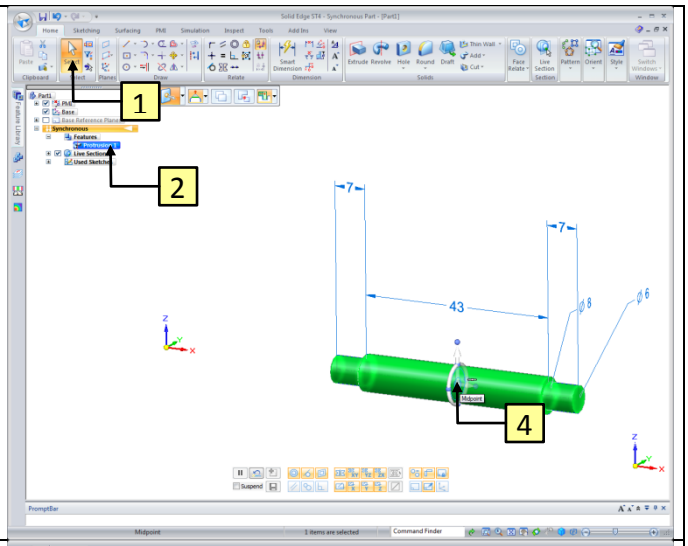
17	5. When you hover over the arrow, it will turn red. Click on the arrow, as shown.	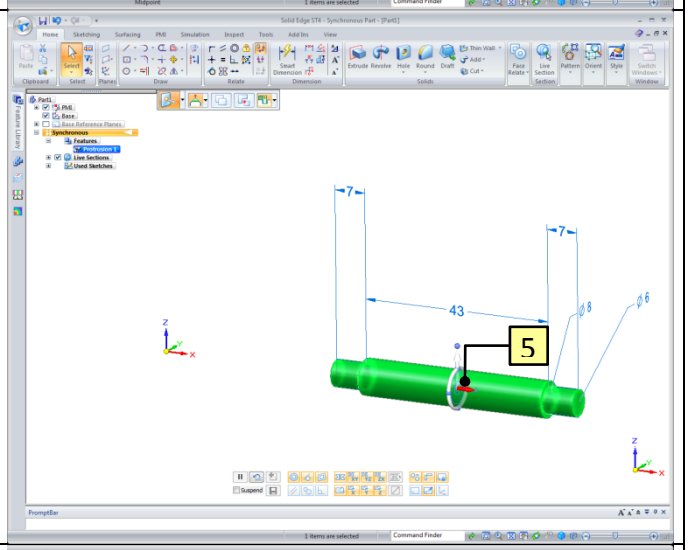
18	6. Point at the **Origin** and wait until the icon appears before clicking.	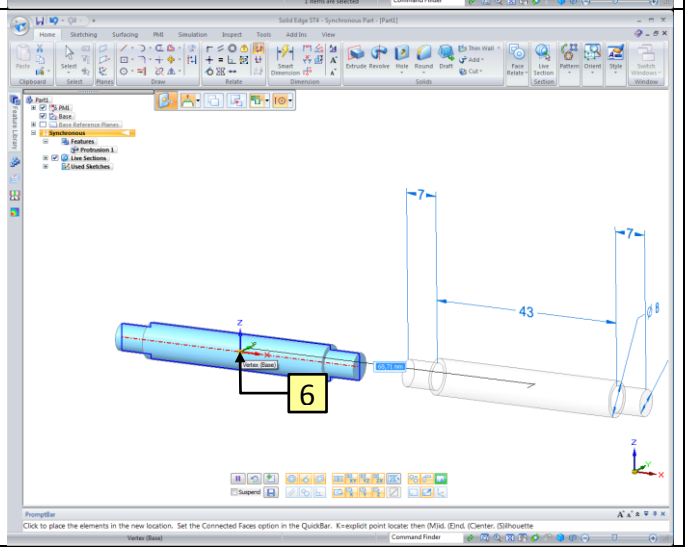

19	1. Click the **Chamfer Equal Setbacks** button.	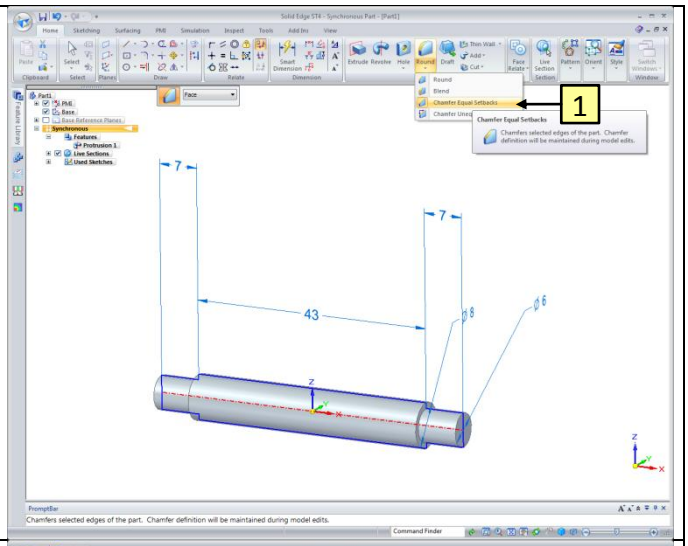
20	2. Click on the right edge, as shown. 3. Key in a value for the chamfer (in this case **1**) and confirm with **Enter**.	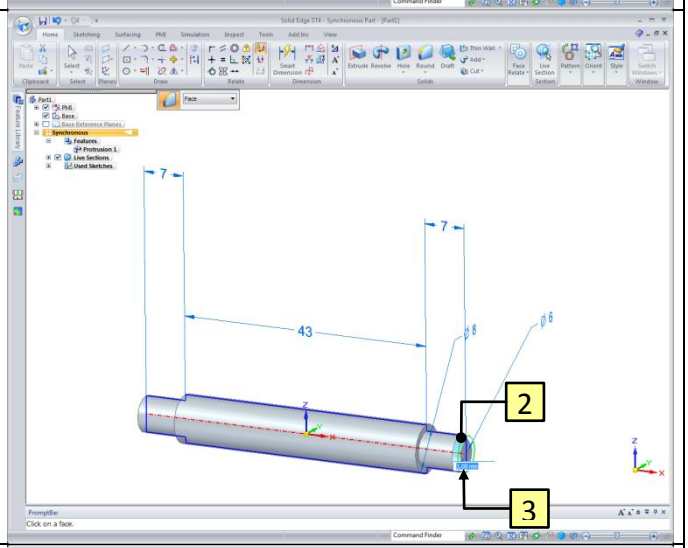
21	1. Click the **Thread** button. 2. Select the type **M6**.	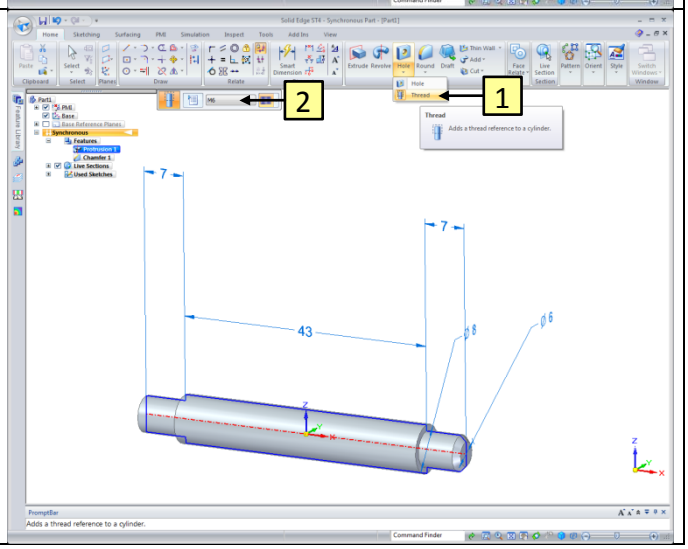

22	3. Click on the cilinder.	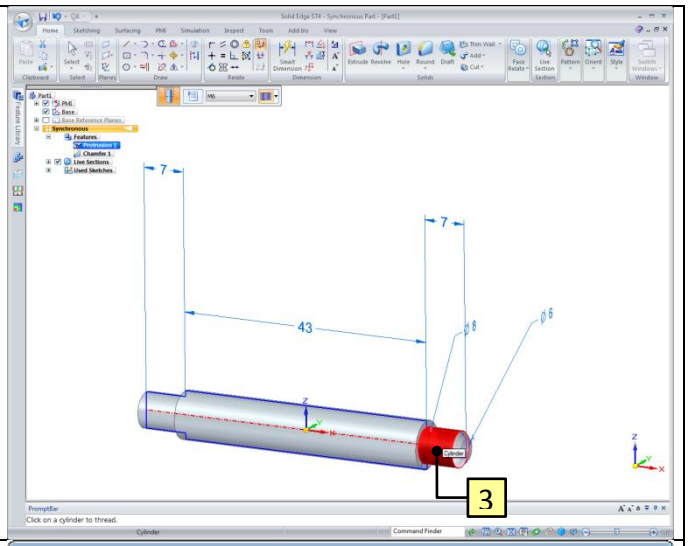
23	4. Click on **OK**.	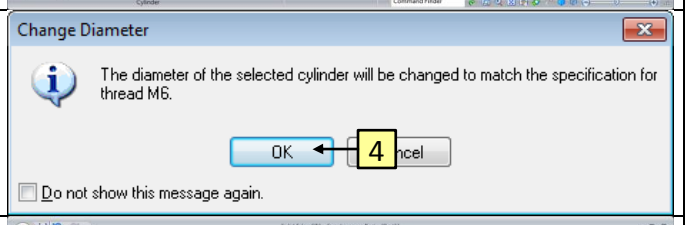
24 +	1. Repeat steps 19 till 23 to make the second **Chamfer** and **Thread**, but to the opposite side.	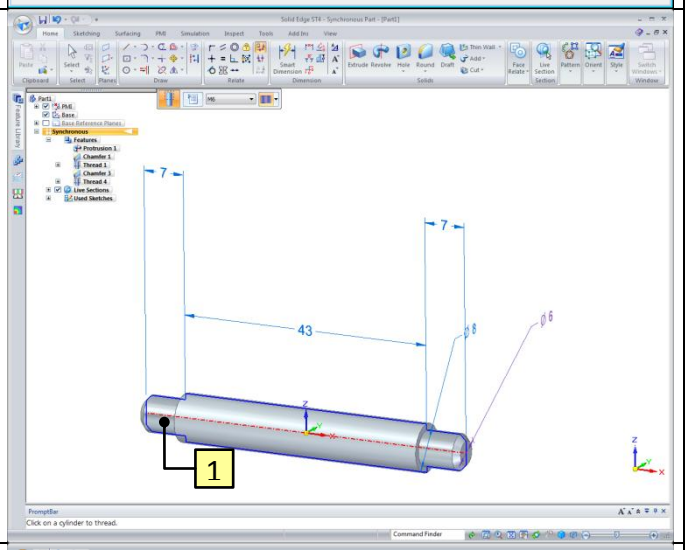
25	Now we set the material property. 1. Click the **Application Button**. 2. Click on **Properties**. 3. Click the **Material Table** button.	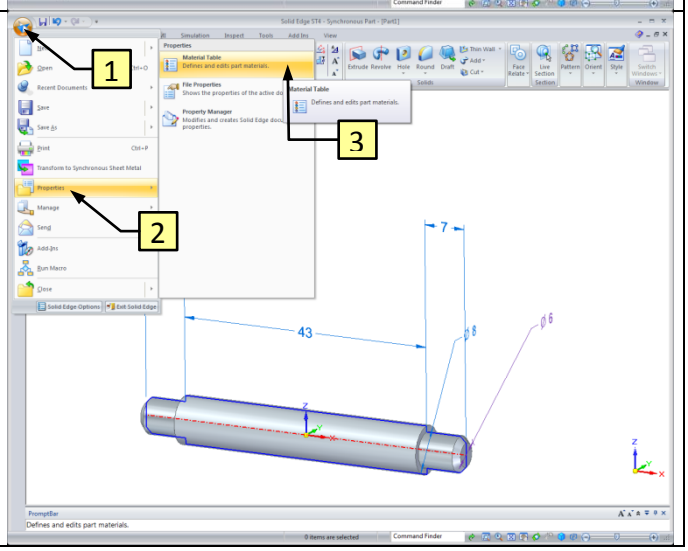

26

1. Choose the material **Steel**.
2. Click **Apply to Model** to set the material to the part.

Hint:
There are several properties which are connected to a material, like color and density. The density is necessary to determine the weight.

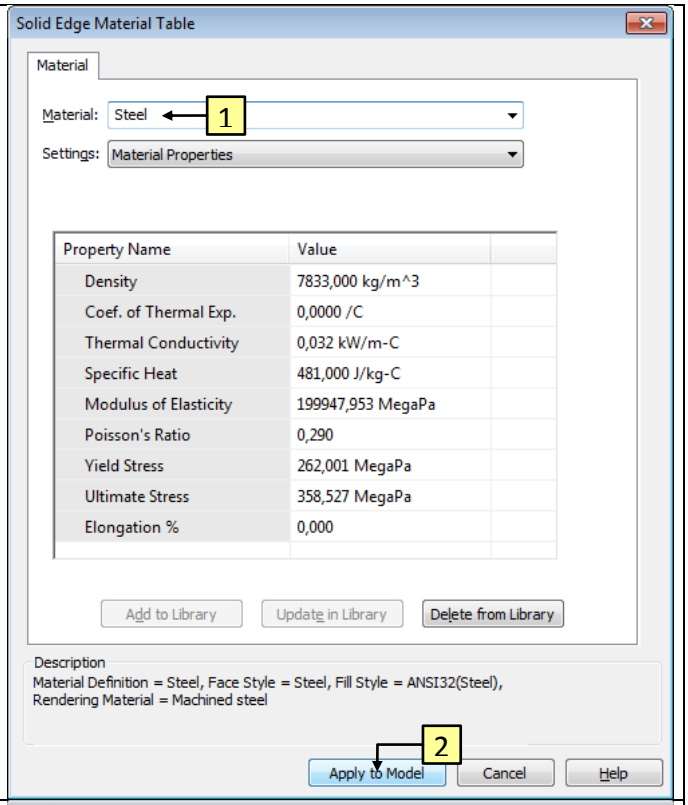

27

Now we can paint the part.

1. Click on **View → Part Painter**.

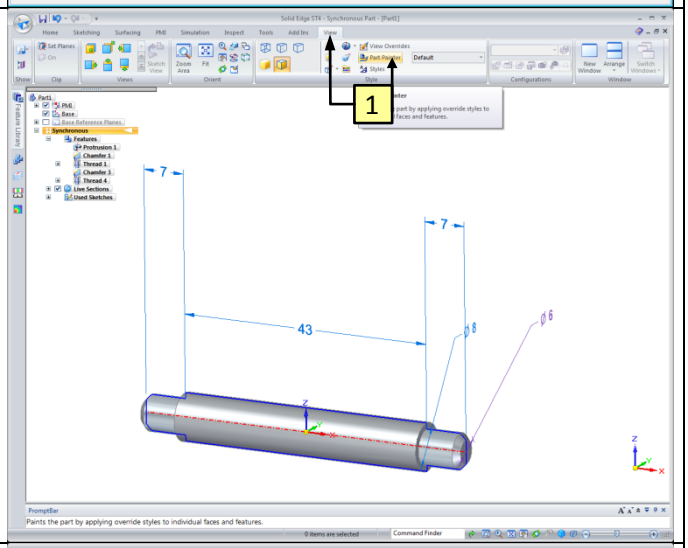

28

1. Select the style **Black**.
2. Click on the part.
3. Click the **Close** button.

Hint:
If you don't get the follow message at step 29, please set the default settings again.

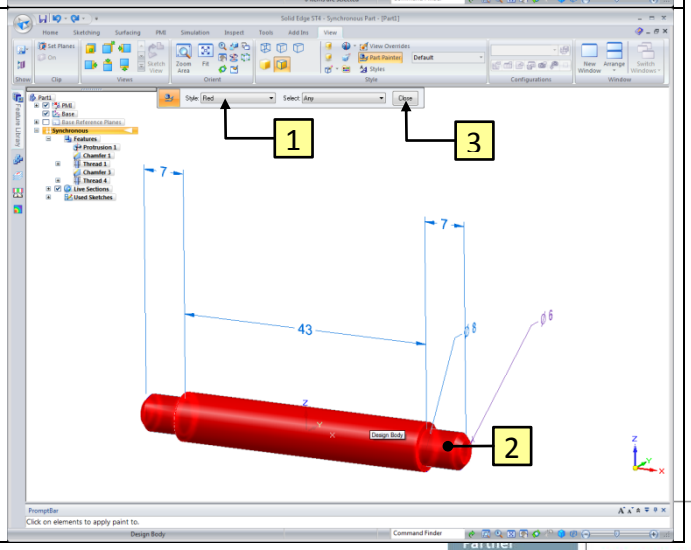

29	The part is ready. Now it must be saved. 1. First press **Ctrl + i** to turn the image to isometric view. 2. Click on the floppy icon. 3. Go to the **Summary** tab**.** 4. Fill in *Rear Axis* at Title. 5. Go to the **Project** tab and fill in the following properties: Document Number*: 1007*. Revision Number*: A*. Project Name: *Roadroller*. 6. Click **OK** to close the screen. ***Hint:*** *All properties of the part are saved at the **File Properties**. These properties will used to fill in a part list.*	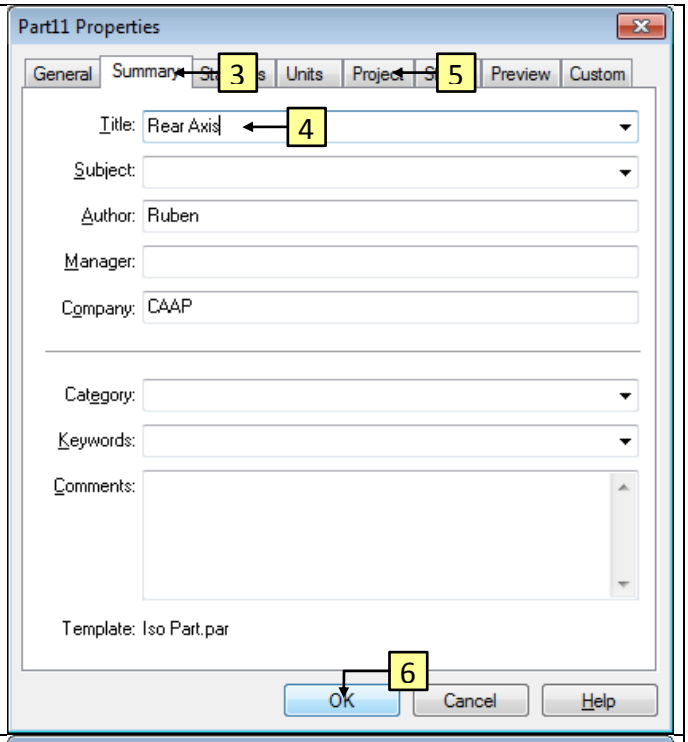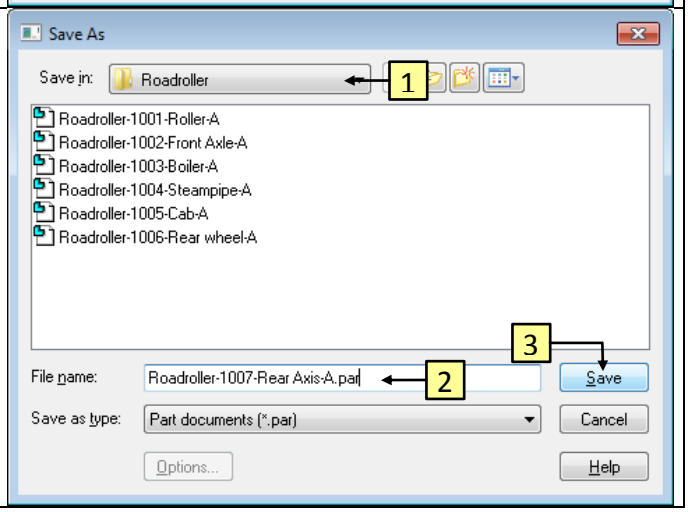
30	1. Browse to the folder *Roadroller*. 2. Save the document by name *Roadroller-1007-Rear Axis-A.par*. 3. Click the **Save** button. 4. Close the file. ***Hint:*** *Save all files of one project in the same folder.*