SOLID EDGE
VELOCITY SERIES

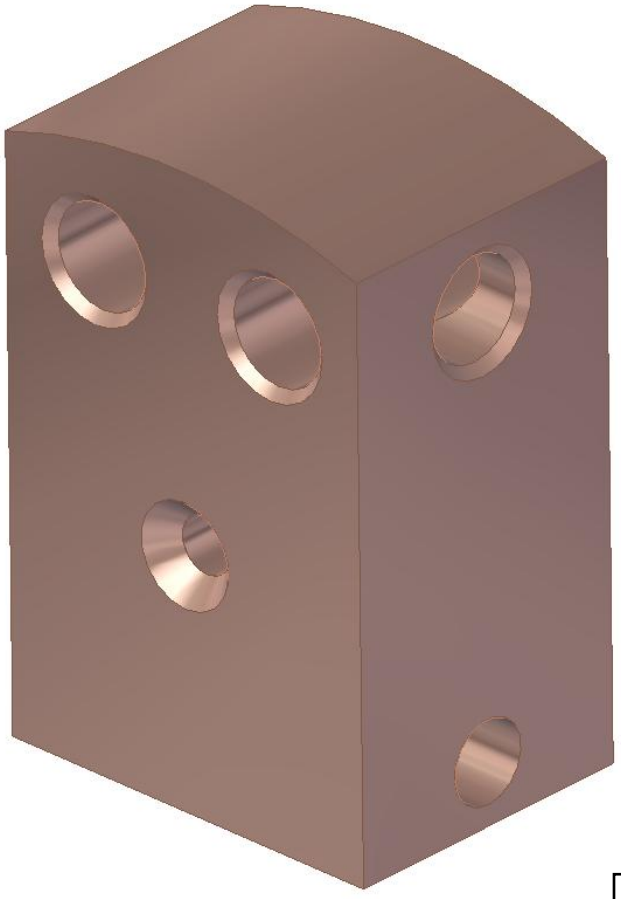

Tutorial: ***Cab***

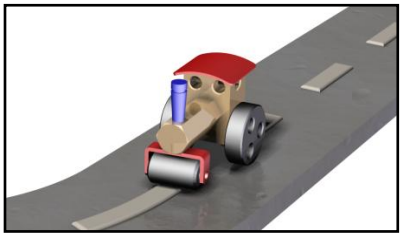

Project: ***Roadroller (Synchronous)***

cad / cam / pdm / cae | CAAP®

Solution Partner PLM | SIEMENS

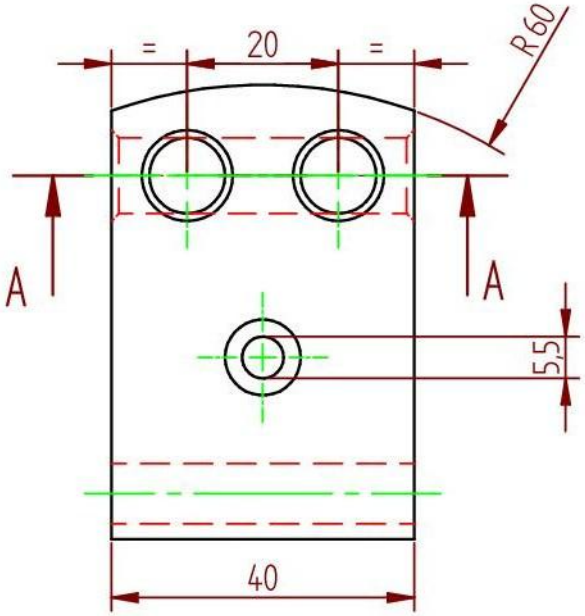

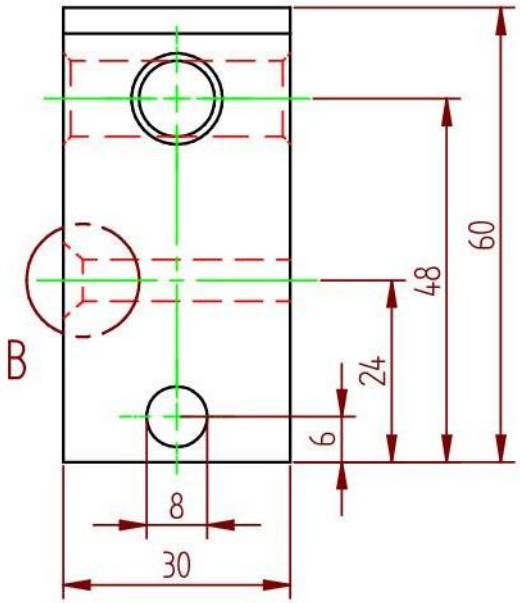

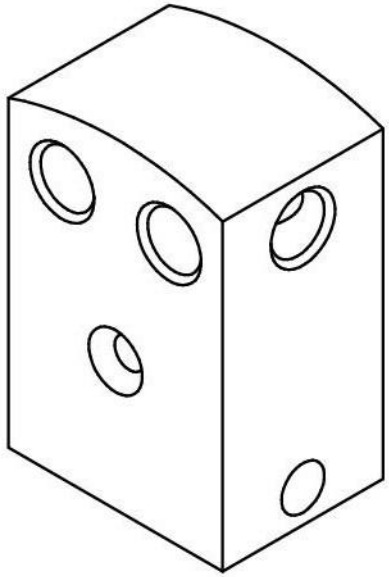

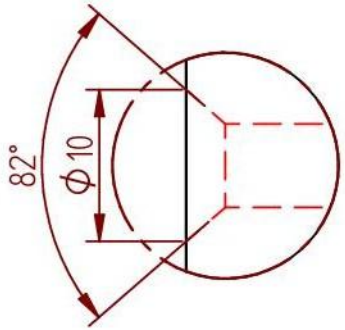

DETAIL B
2:1

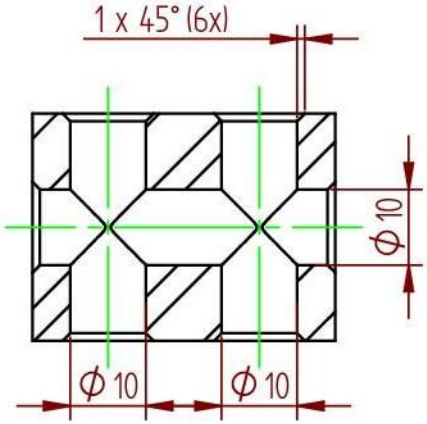

SECTION A-A

AMERICAN PROJECTION	SCALE : 1:1	AUTHOR : Ruben	CAAP Hamersveldseweg 65 3833 GL Leusden t +31(0)33-4573322 www.caap.nl
	DIMENSION UNITS : MM	CLASS (DEPARTMENT) : -	
	DATE : 22-8-2011	CHECKED BY : -	

MATERIAL : Steel	BENAMING : Cab	NUMBER : 1005	REV: A	SIZE: A4
PROJECT: Roadroller				

1 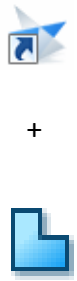	1. Start **Solid Edge.** 2. Click on **<u>ISO Part.</u>** 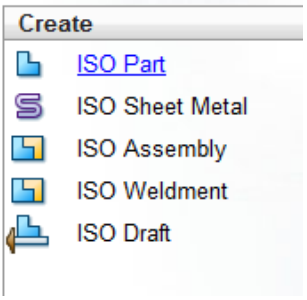	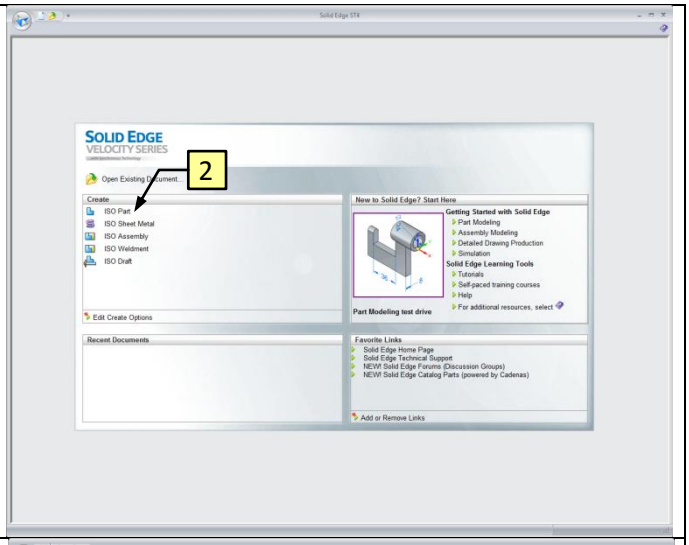
3	1. Click the **Rectangle by Center** button. 2. Point at the **Origin** and wait until the icon appears before clicking.	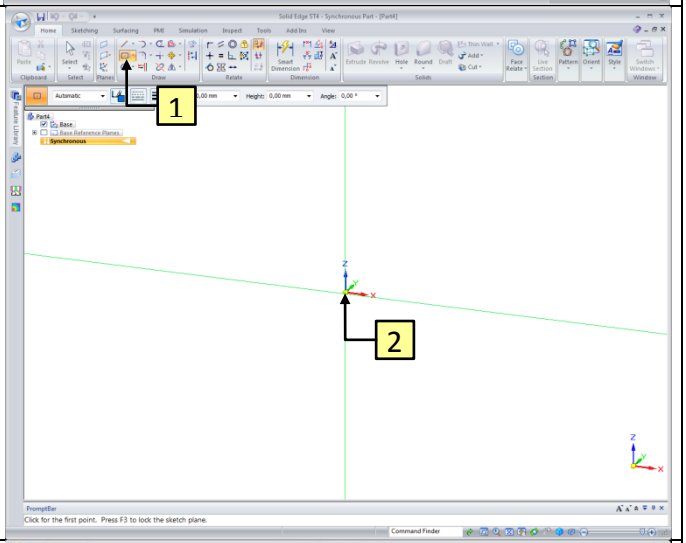
4	3. Click to place the Rectangle.	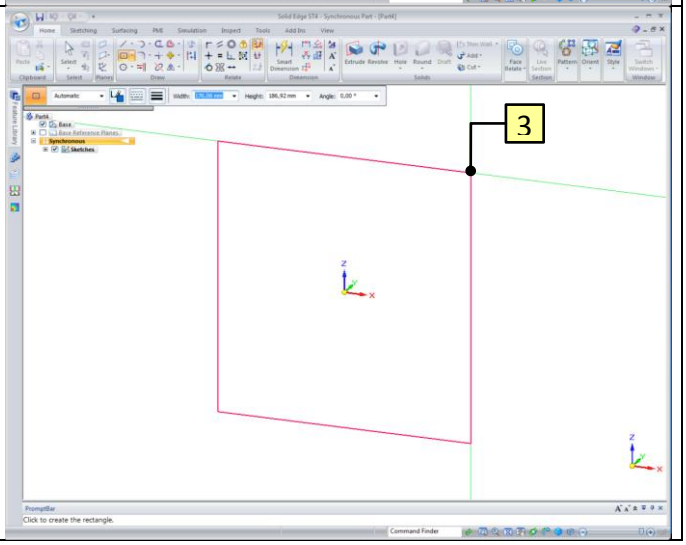

5	1. Click the **Arc by 3 Points** button.	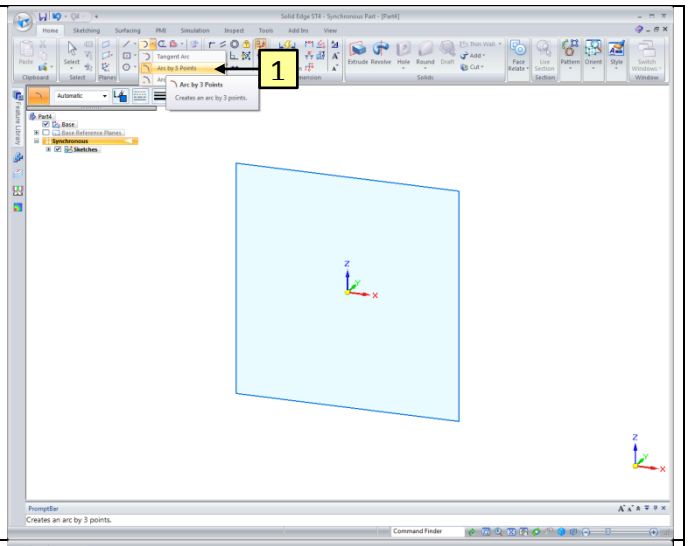
6	2. Click on the left endpoint of the horizontal line, as shown. 3. Click on the right endpoint of the horizontal line. 4. Click to place the arc.	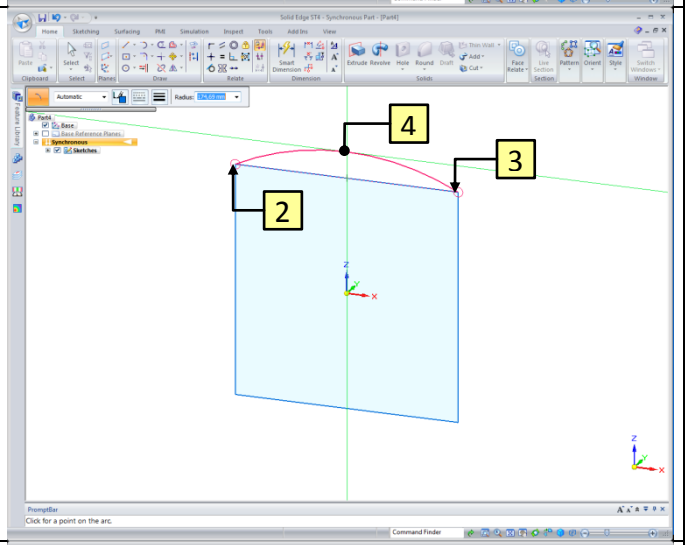
7	1. Click the **For Construction** button. 2. Click the horizontal line, as shown.	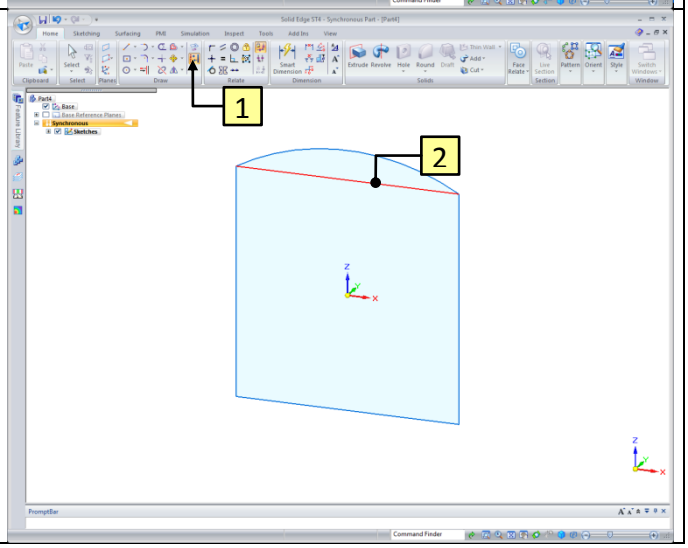

8	1. Click the **Connect** button. 2. Point at the centre of the Arc. Wait till the icon appears before clicking. 3. Point at the centre of the horizontal line. Wait until the icon appears before clicking.	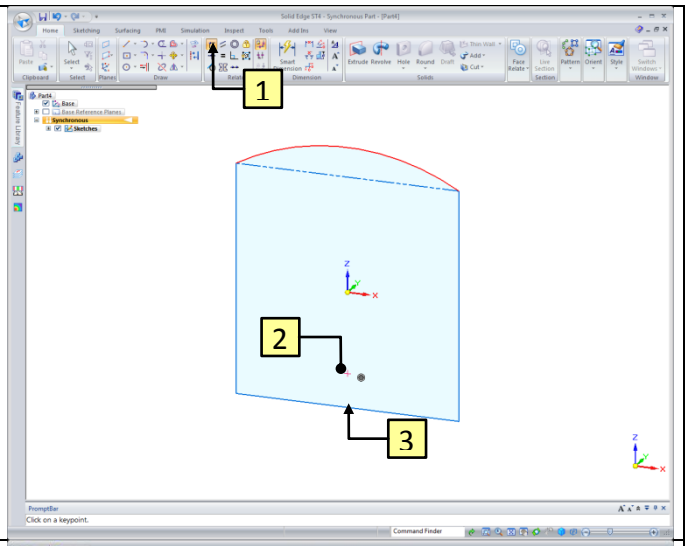
9	1. Click the **Select** button. 2. When you hover over the Region it will turn red. Click on the Region, as shown.	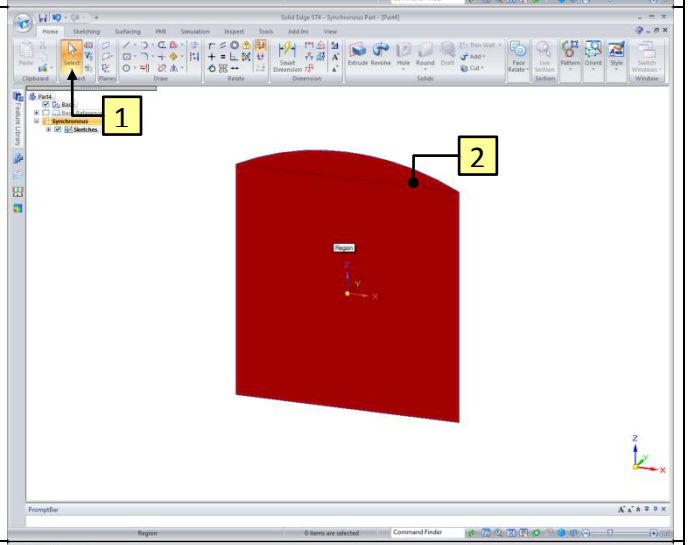
10	3. When you hover over the arrow, it will turn red. Click on the arrow, as shown. 4. Click the **Extrude – Symmetric** button.	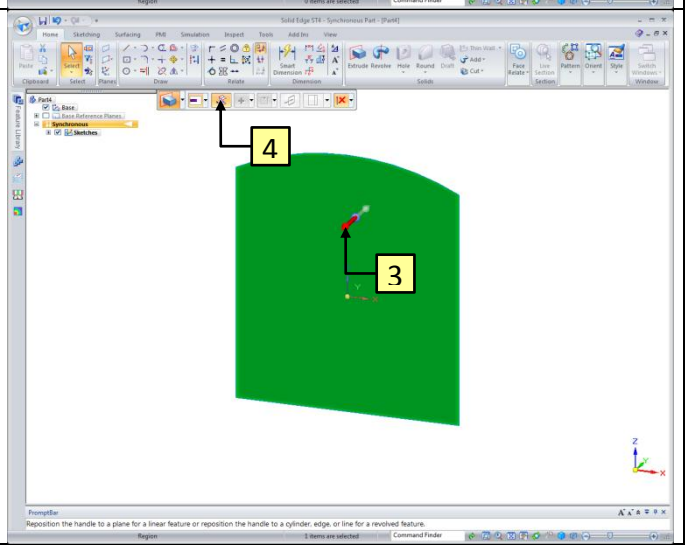

11 	5. Key in the value **30** and confirm with **Enter**.	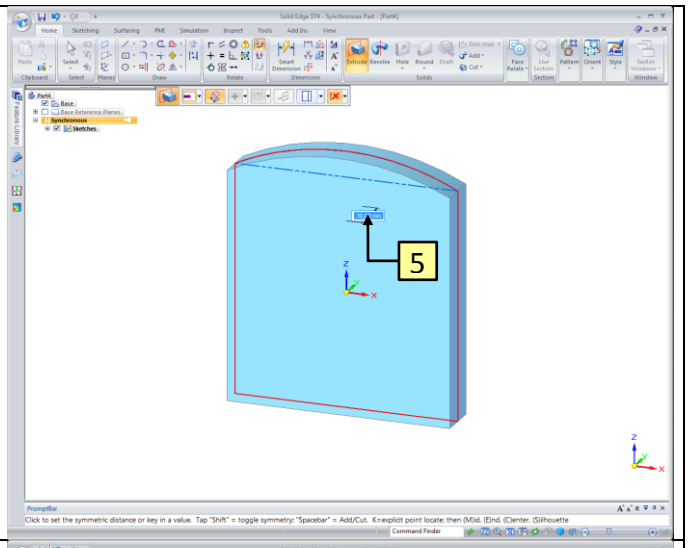
12 	1. Click the **Smart Dimension** button. 2. Click the horizontal line. 3. Click to place the dimension. 4. Make sure the left green arrow is selected. 5. Key in the value **40** and confirm with **Enter**.	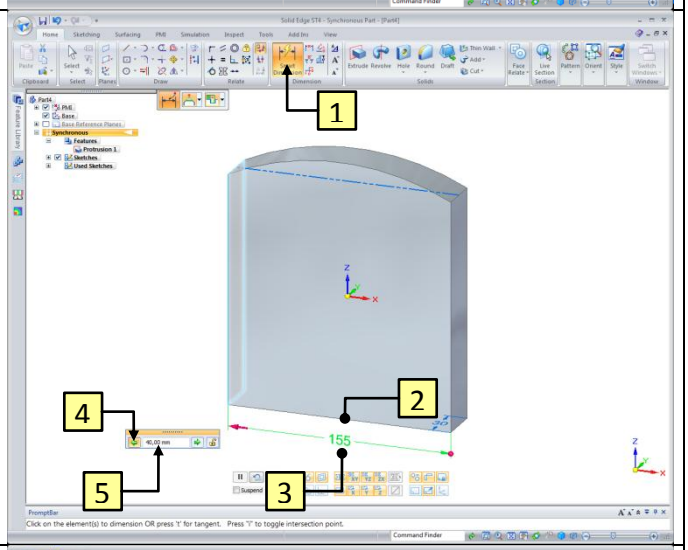
13 	1. Click the **Select** button. 2. Click on the plus icon, to open the sketches. 3. Deselect the sketch, to hide the construction line.	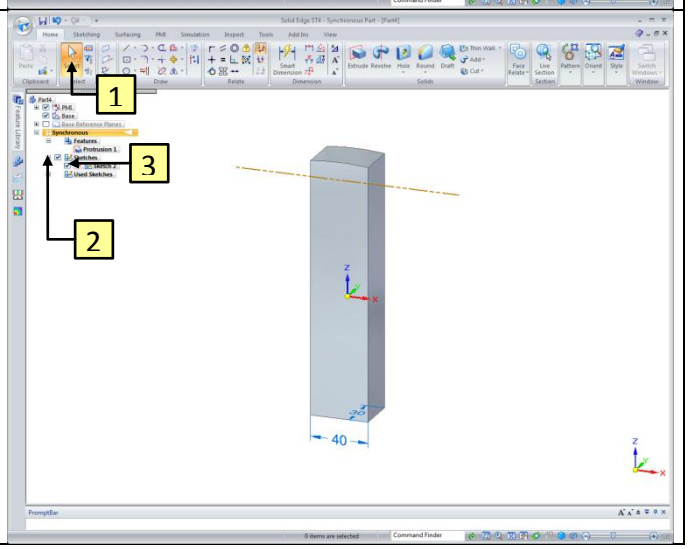

14	1. Click the **Smart Dimension** button. 2. Click on the edge of the Arc. 3. Click to place the dimension. 4. Key in the value **60** and confirm with **Enter**.	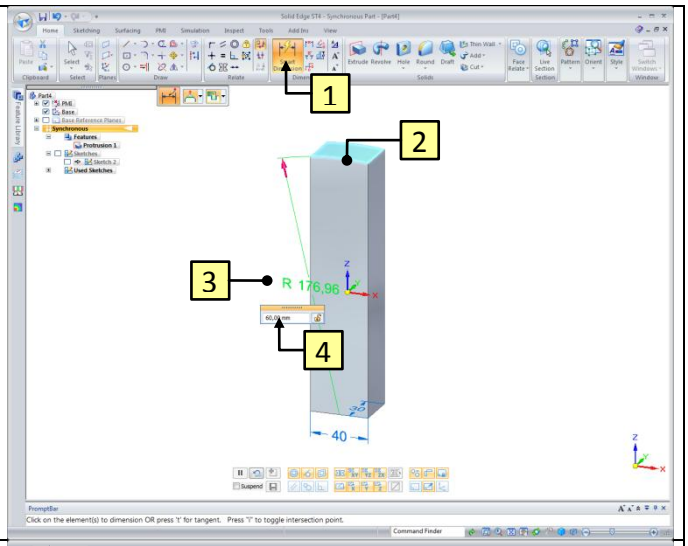
15	1. Click the **Select** button. 2. Click on **Protrusion** in the PathFinder. 3. Click on the blue point of the Steering Wheel.	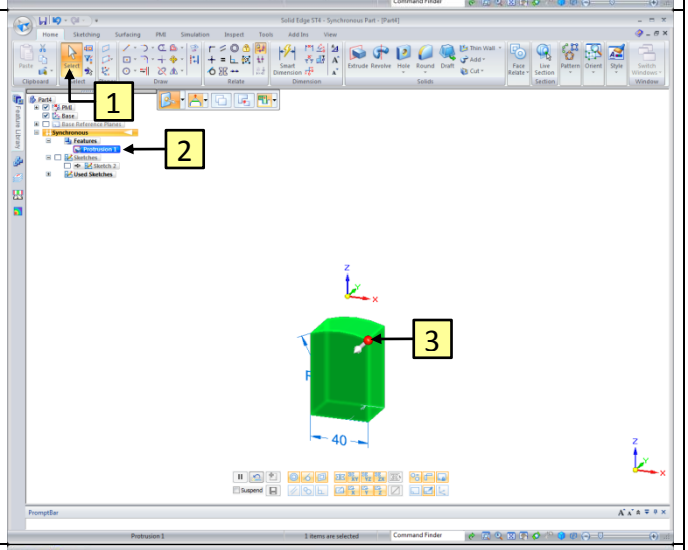
16	4. Point at the middle of the vertical line. Wait until the icon appears before clicking.	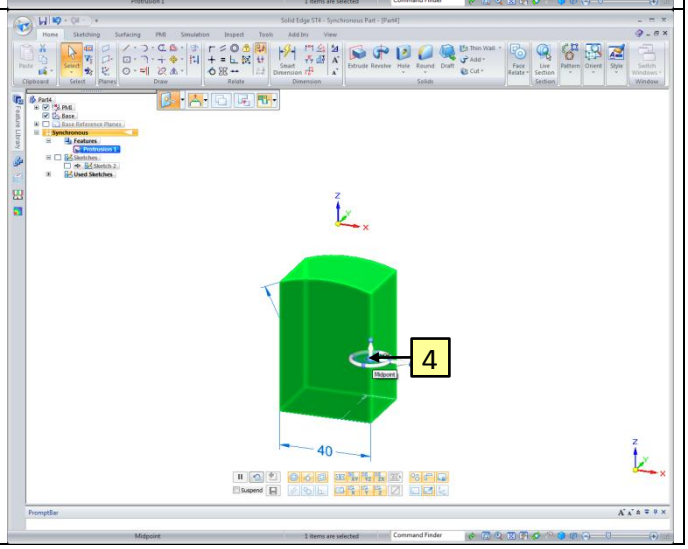

17	5. When you hover over the arrow it will turn red. Click on the arrow, as shown.	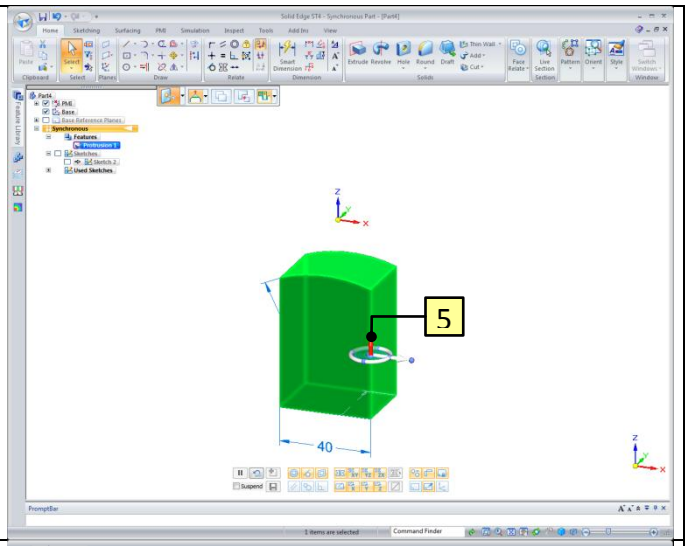
18	6. Point at the **Origin** and wait until the icon appears before clicking.	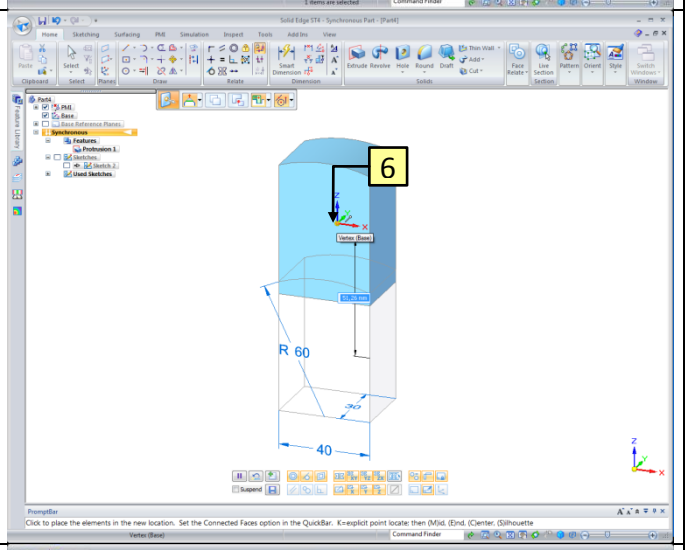
19 +	1. Click on the **Hole** button. 2. Click the **Hole Options** button.	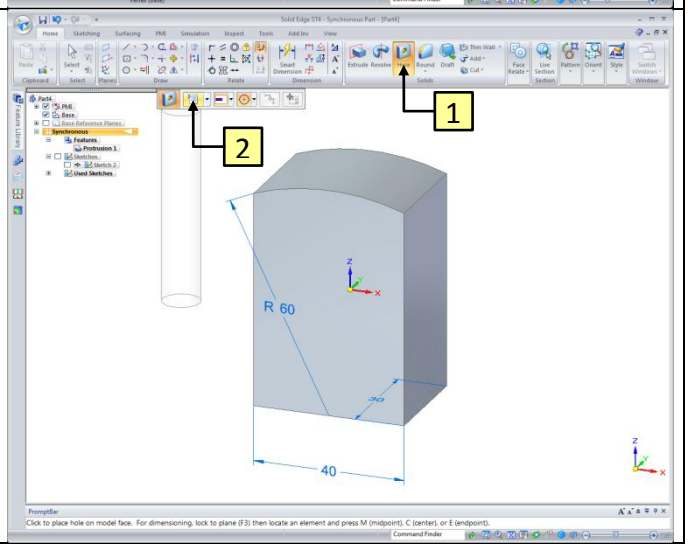

20	Fill in the Hole Options, as shown. 1. Type: **Countersink**; 2. Diameter: **5.5**; 3. Countersink diameter: **10**; 4. Countersink angle: **82**; 5. Extents: **Through All**; 6. Click the **OK** button**.**	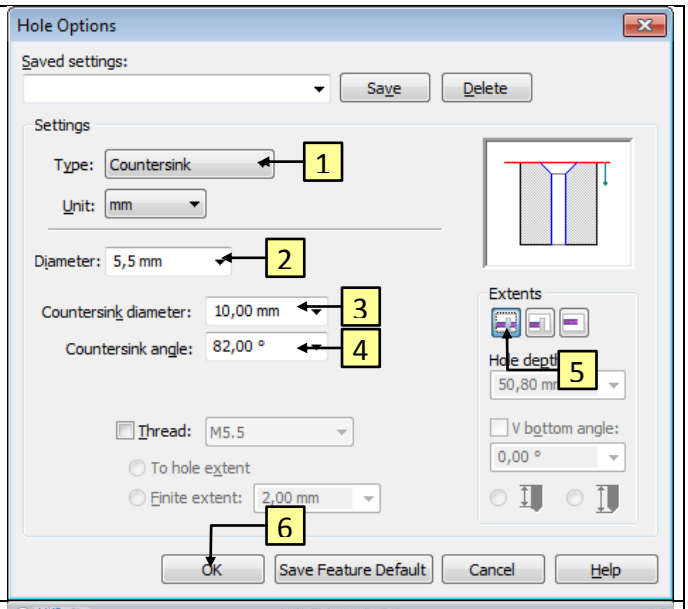
21 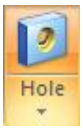	1. Point the cursor on the front plane and click to place the Hole.	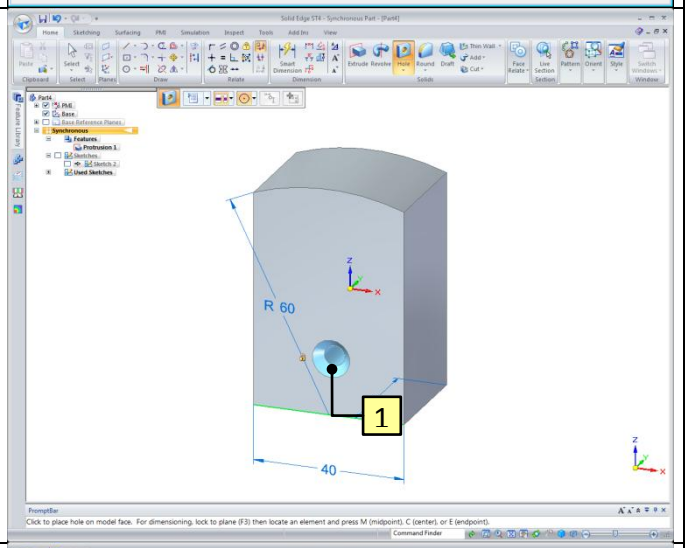
22	1. Click the **Select** button. 2. When you hover over the arrow, it will turn red. Click on the arrow, as shown.	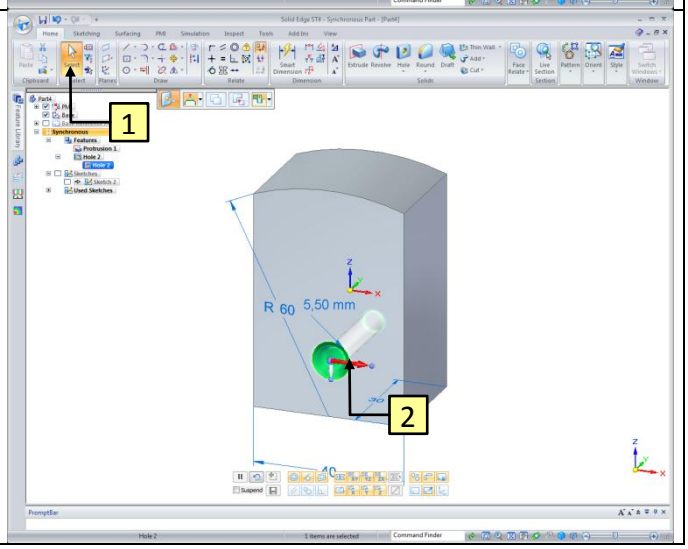

23	3. Point at the middle of the horizontal line. Wait until the icon appears before clicking.	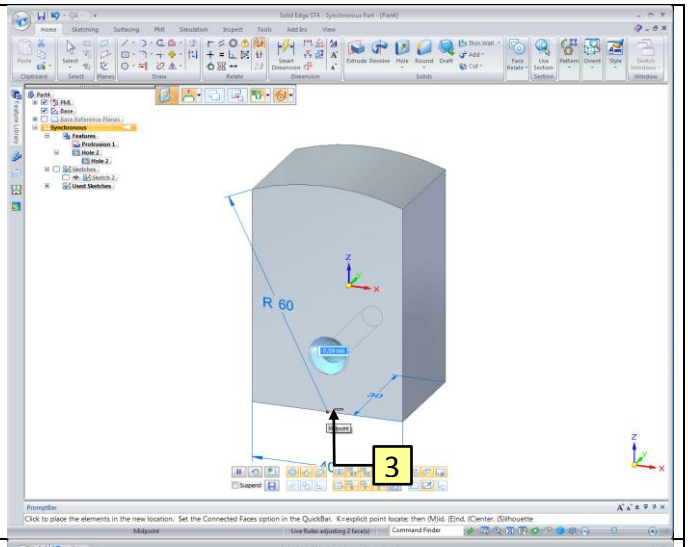
24	1. Click the **Smart Dimension** button. 2. Click on the edge of the **Hole**. 3. Click on the horizontal line. 4. Click to place the dimension. 5. Make sure the left green arrow is selected. 6. Key in the value **24** and confirm with **Enter**.	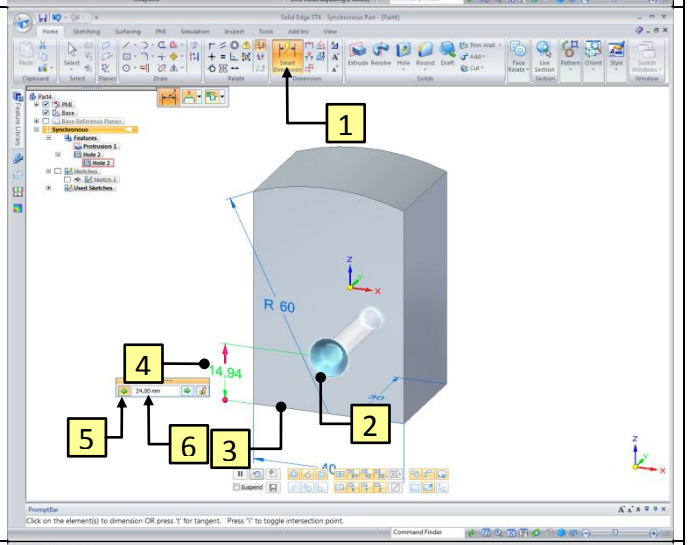
25 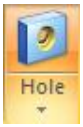 +	1. Click the **Hole** button. 2. Click the **Hole Options** button.	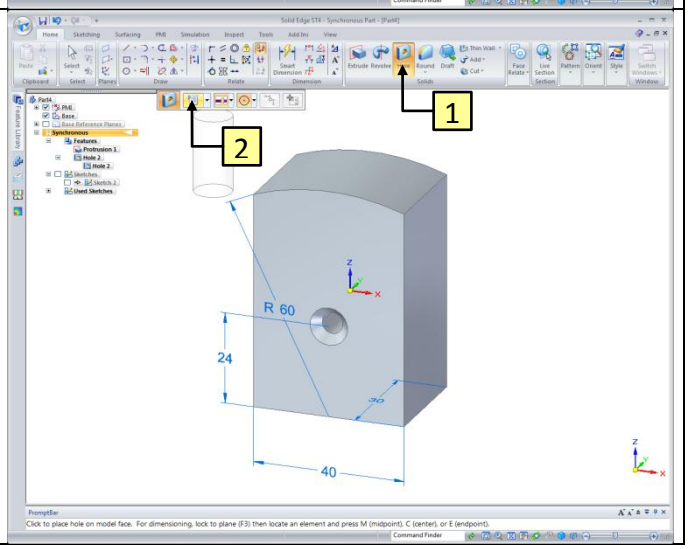

26	Fill in the Hole Options, as shown. 1. Type: **Simple**; 2. Diameter: **8**; 3. Click the **OK** button.	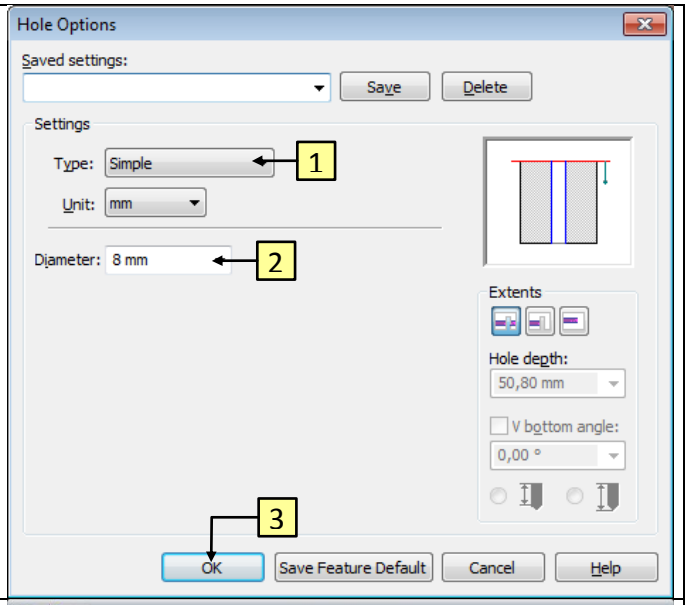
27 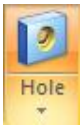	1. Point the cursor at the right plane and click to place the Hole.	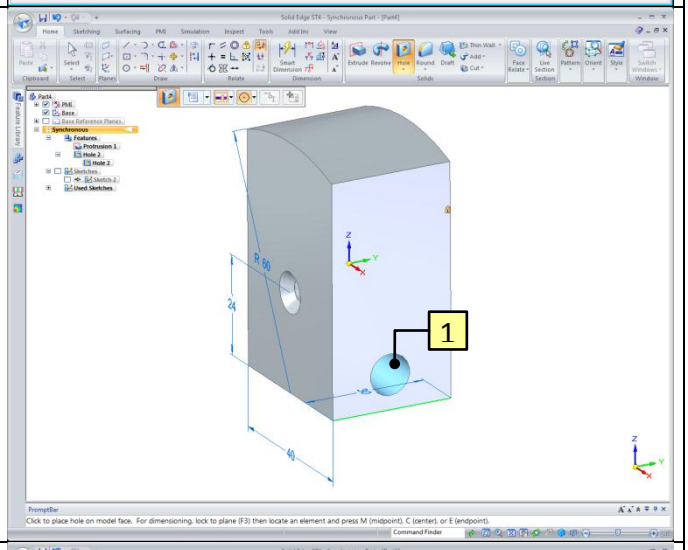
28	1. Click the **Select** button. 2. Click on the **Hole**. 3. When you hover over the arrow, it will turn red. Click on the arrow, as shown.	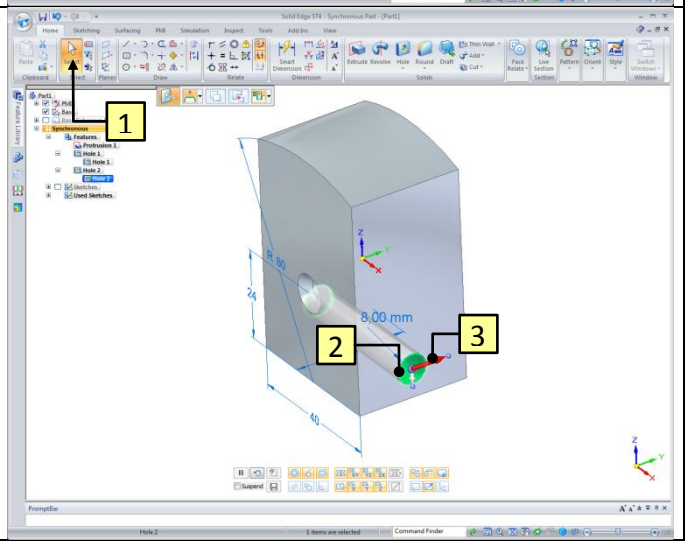

29	4. Point at the middle of the horizontal line. Wait until the icon appears before clicking.	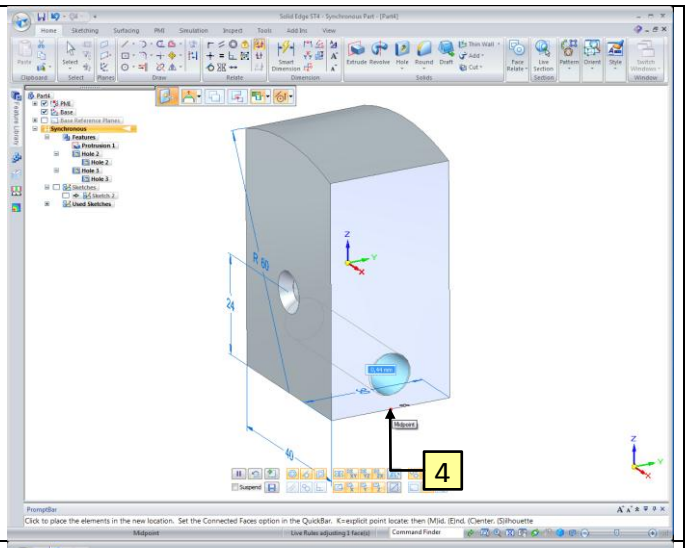
30	1. Click the **Smart Dimension** button. 2. Click on the edge of the Hole. 3. Click on the horizontal line. 4. Click to place the dimension. 5. Make sure the left green arrow is selected. 6. Key in the value **6** and confirm with **Enter**.	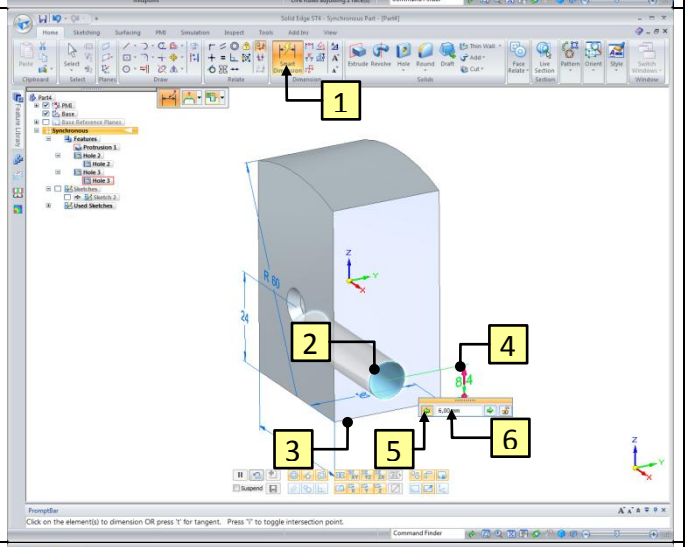
31 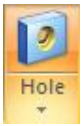 +	1. Click the **Hole** button. 2. Click the **Hole Options** button.	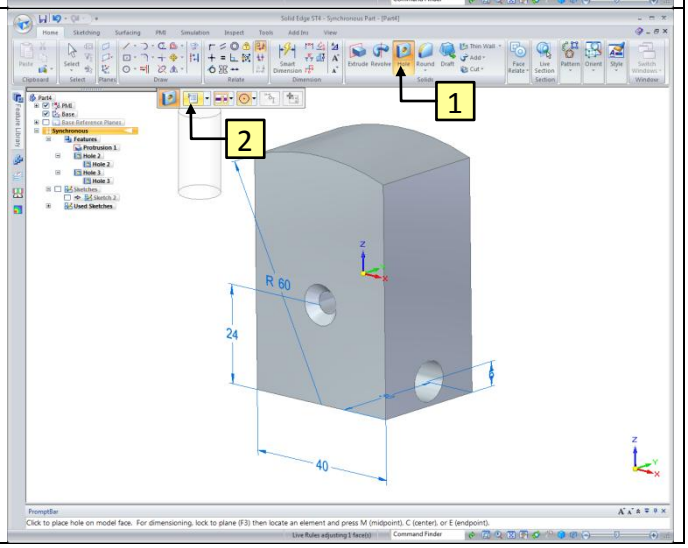

32	Fill in the Hole Options, as shown. 1. Type: **Simple**; 2. Diameter: **10**; 3. Click the **OK** button.	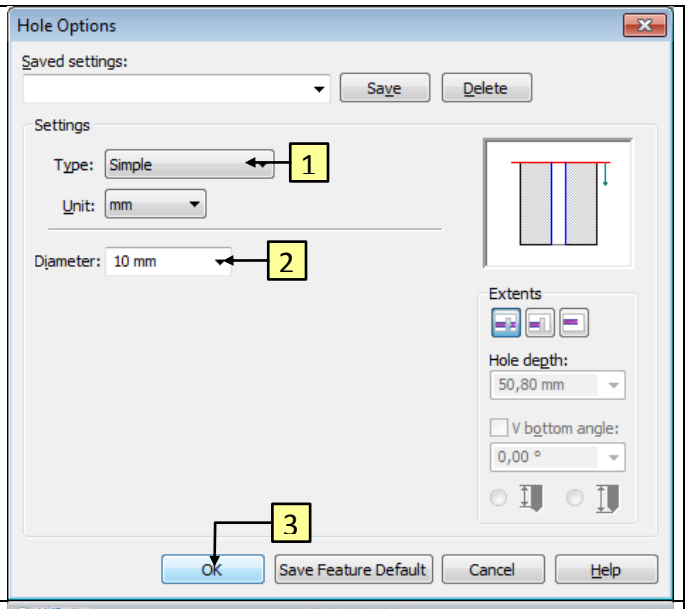
33 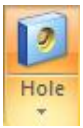	4. Point on the front plane and click twice to place the Holes.	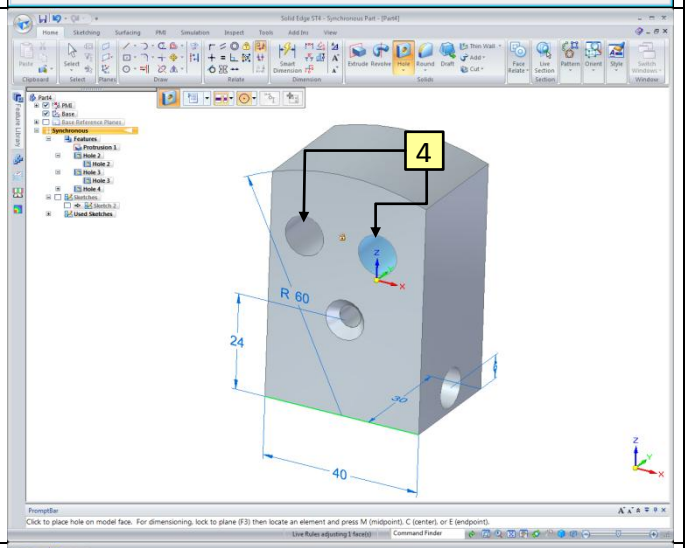
34	1. Click the **Smart Dimension** button. 2. Click on the edge of the Hole. 3. Click on the horizontal line. 4. Click to place the dimension. 5. Make sure the right green arrow is selected. 6. Key in the value **48** and confirm with **Enter**.	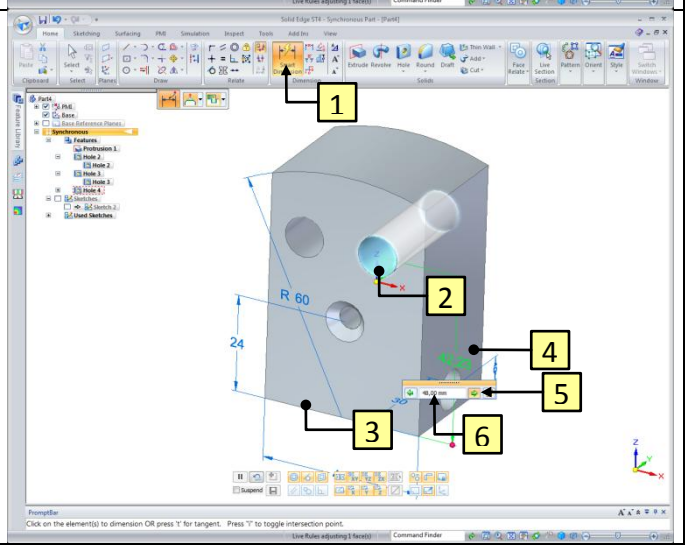

35	If the **Smart Dimension** is still active. 1. Click on the edge of the right Hole. 2. Click on the right vertical line. 3. Click to place the dimension. 4. Make sure the left green arrow is selected. 5. Key in the value **10** and confirm with **Enter**.	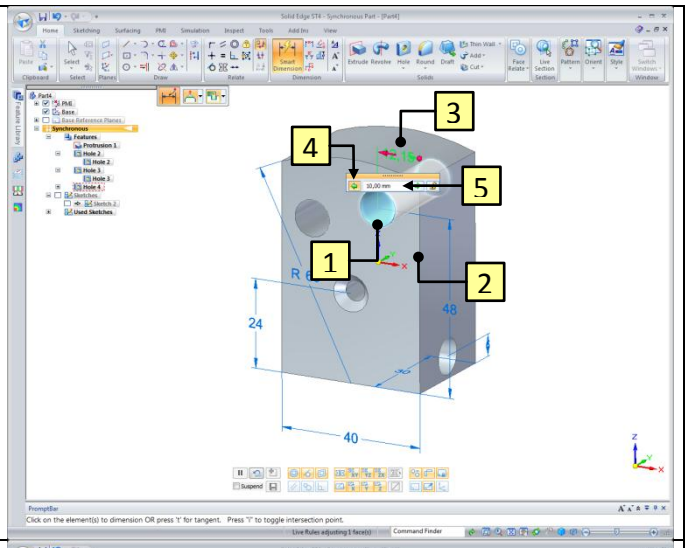
36	1. Click the **Select** button. 2. Click on the **Hole**. 3. When you hover over the arrow, it will turn red. Click on the arrow, as shown.	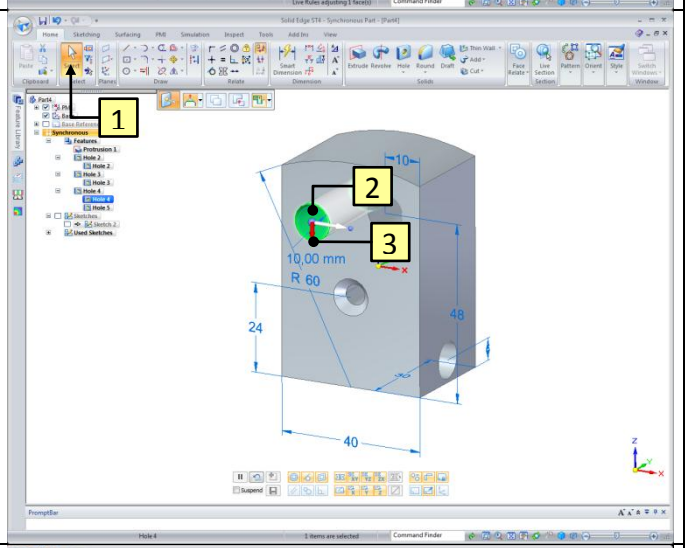
37	4. Point at the edge of the right Hole. Wait till the icon appears before clicking.	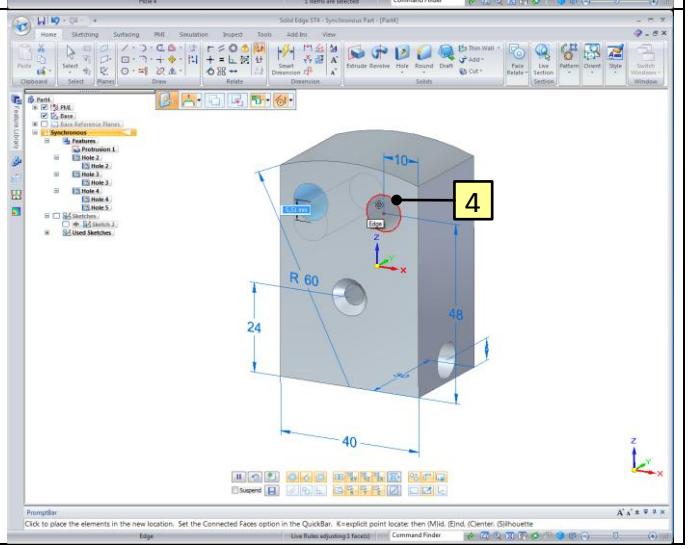

38	1. Click on the **Smart Dimension** button. 2. Click on the edge of the left Hole. 3. Click on the left vertical line. 4. Click to place the dimension. 5. Make sure the right green arrow is selected. 6. Key in the value **10** and confirm with **Enter**.	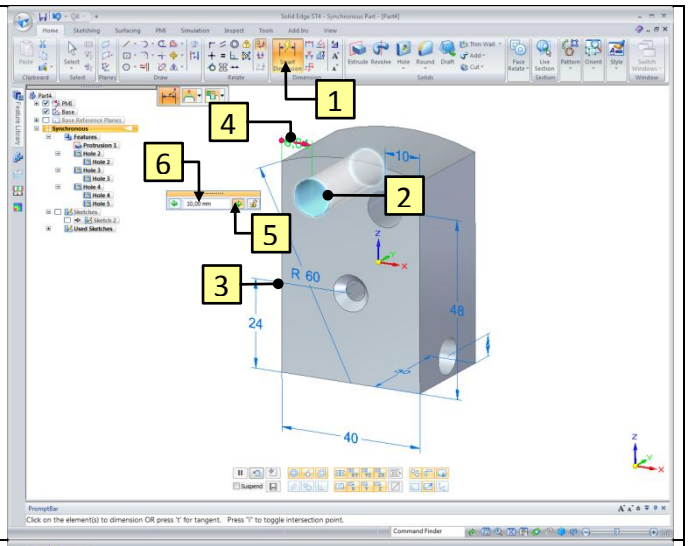
39 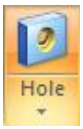 +	1. Click the **Hole** button. 2. Click the **Hole Options** button.	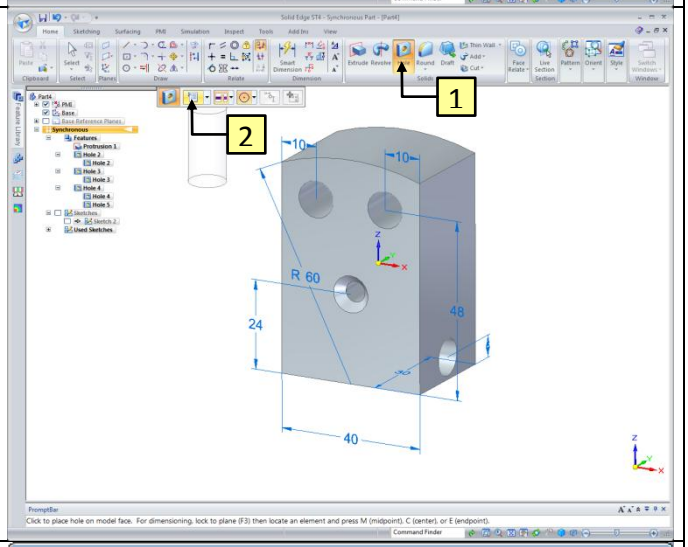
40	Fill in the Hole Options, as shown. 1. Type: **Simple**; 2. Diameter: **10**; 3. Click the **OK** button.	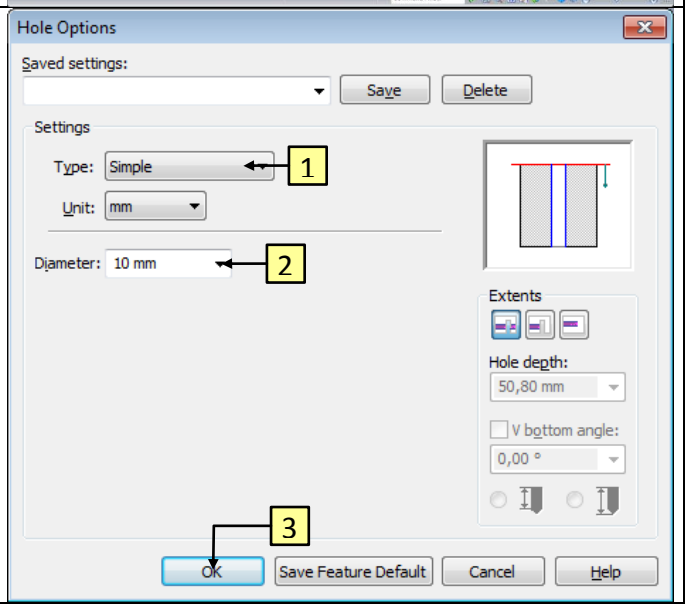

41	1. Point at the right plane and click to place the Hole.	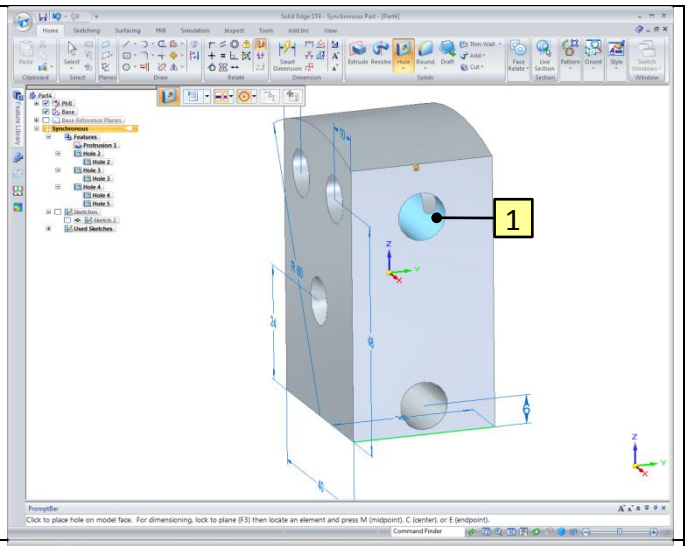
42	1. Click the **Select** button. 2. When you hover over the arrow, it will turn red. Click on the arrow, as shown.	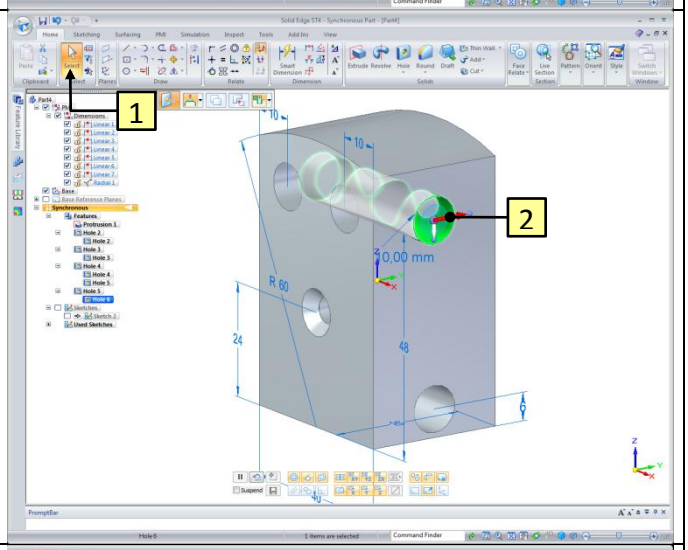
43	3. Point at the middle of the horizontal line. Wait until the icon appears before clicking.	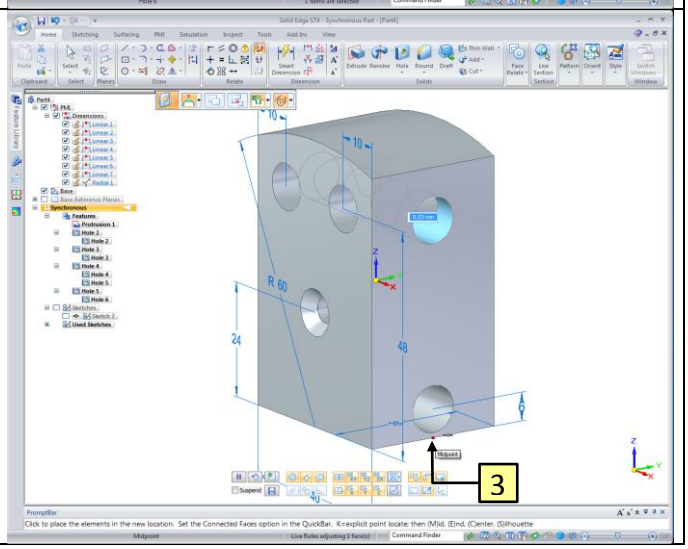

44	1. Click on the **Smart Dimension** button. 2. Click on the edge of the Hole. 3. Click on the horizontal line. 4. Click to place the dimension. 5. Make sure the left green arrow is selected. 6. Key in the value **47,99** and confirm with **Enter**.	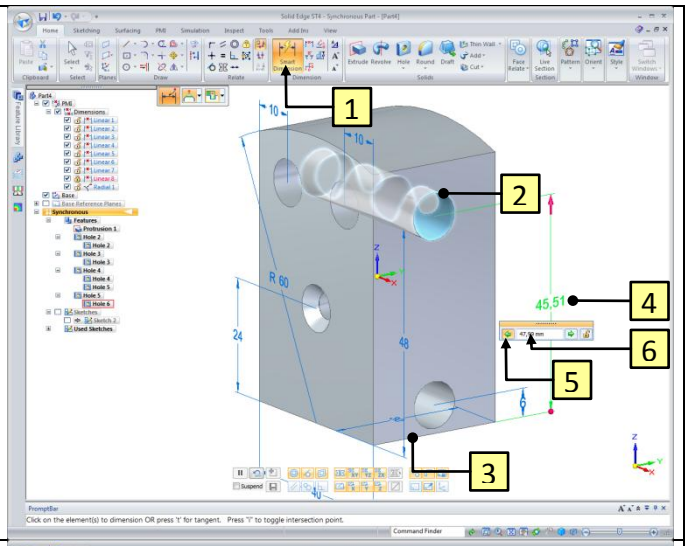
45	1. Click the **Chamfer by Equal Setbacks** button.	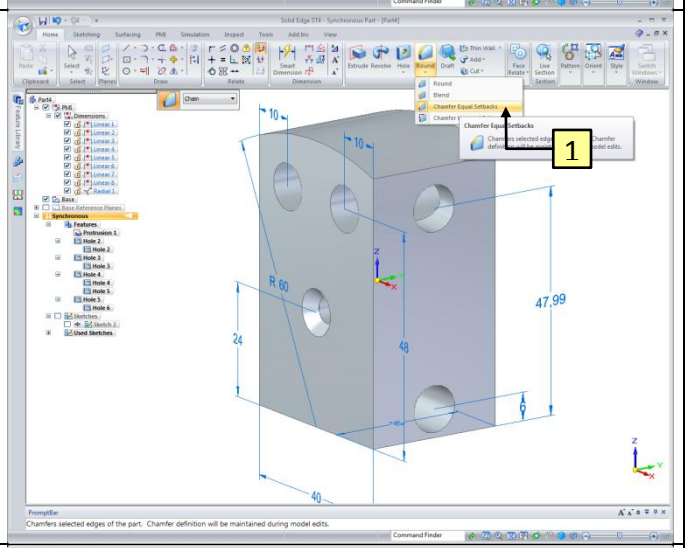
46	2. Click on the edges, as shown. 3. Key in a value for the chamfer (in this case **1**) and confirm with **Enter**.	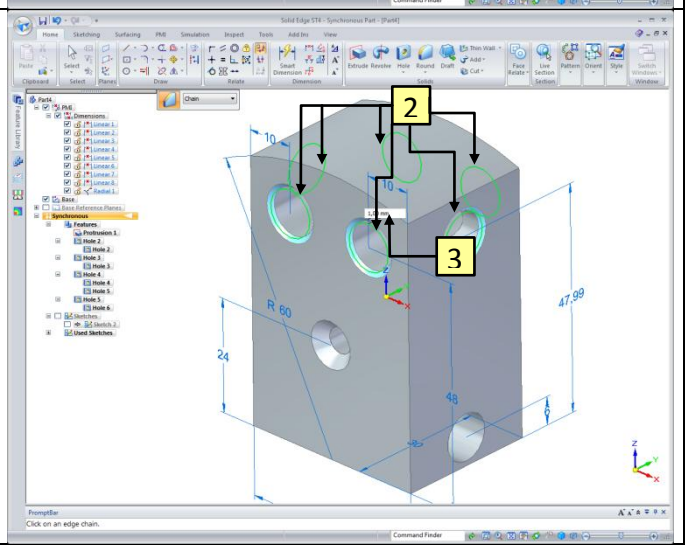

47	Now we set the material property. 1. Click the **Application Button**. 2. Click on **Properties**. 3. Click the **Material Table**.	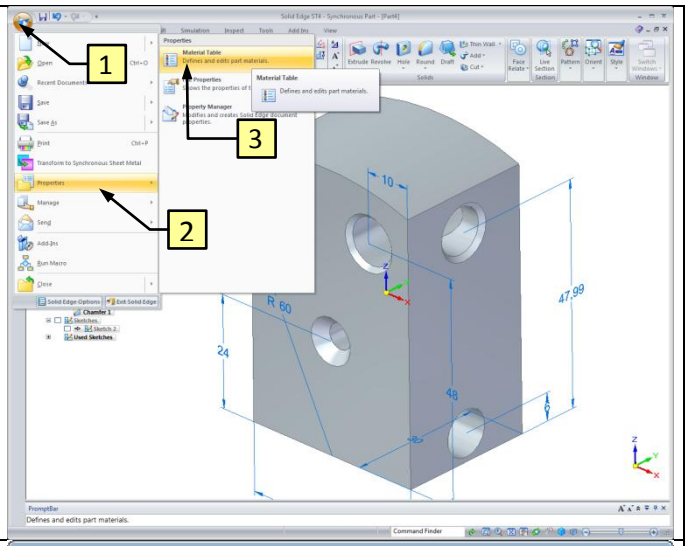
48	1. Choose the material **Steel**. 2. Click **Apply to Model** to set the material to the part. ***Hint:*** *There are several properties which are connected to a material, like color en density. The density is necessary to determine the weight.*	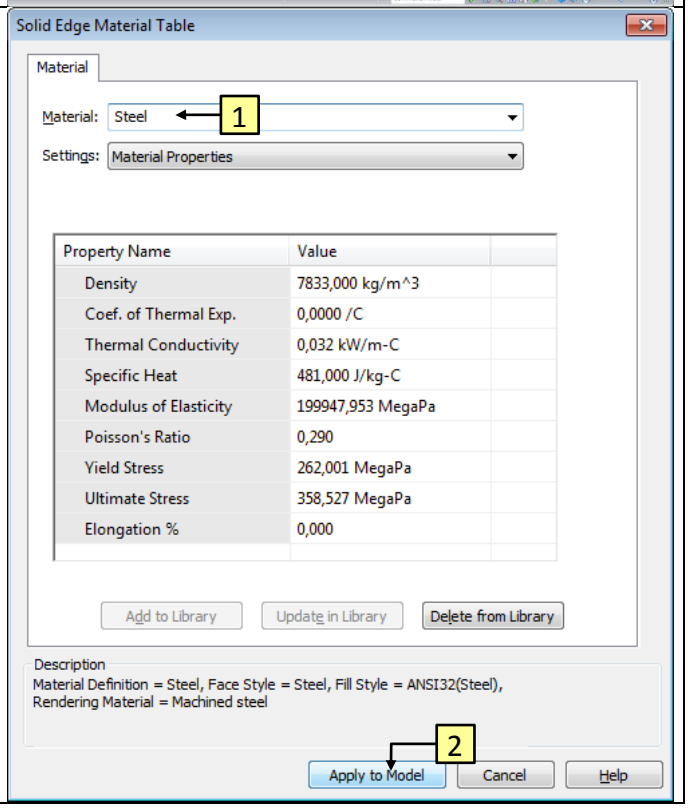

49	Now we can paint the part. 1. Click on **View → Part Painter**.	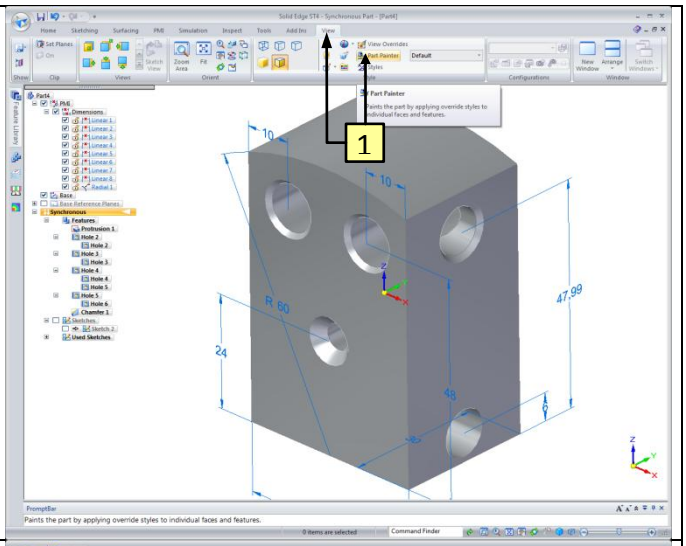
50	1. Select the style **Copper**. 2. Click on the part. 3. Click the **Close** button. ***Hint:*** *If you don't get the follow message at step 51, please set the default settings again.*	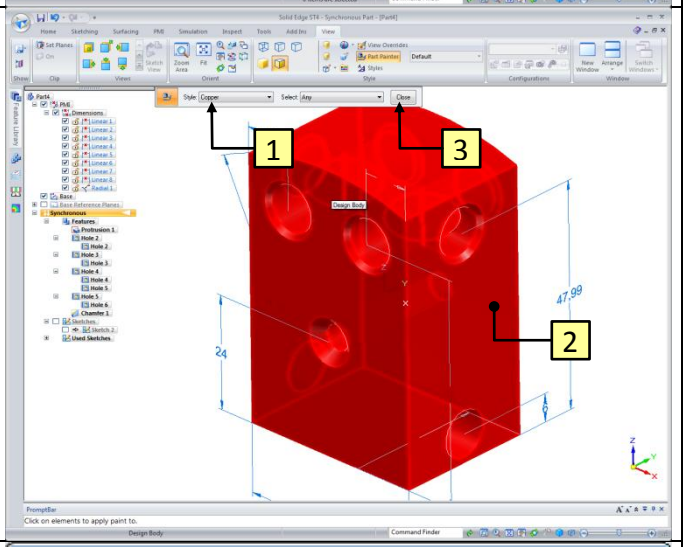
51	The part is ready. Now it must be saved. 1. First press **Ctrl** and **i** to turn the image to isometric view. 2. Click on the floppy icon. 3. Go to the **Summary** tab**.** 4. Type *Cab* at Title. 5. Go to the **Project** tab and fill in the following properties: Document Number*: 1005*. Revision Number*: A*. Project Name: *Roadroller*. 6. Click **OK** to close the screen. ***Hint:*** *All properties of the part are saved at the **File Properties**. These properties will be used by making a drawing or part list.*	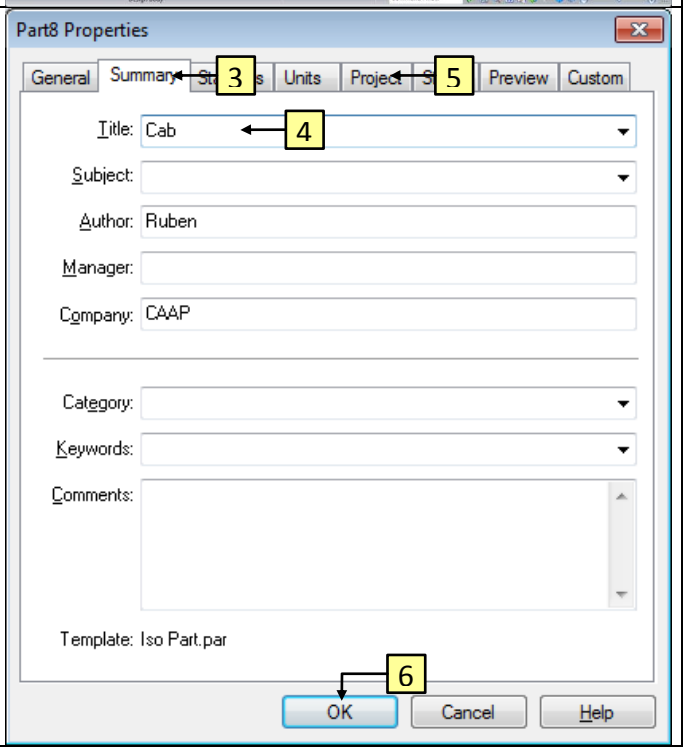
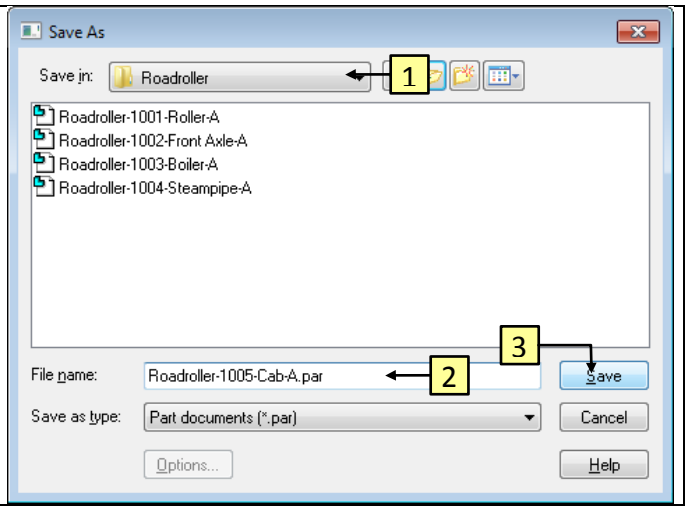
52	1. Browse to the folder *Roadroller*. 2. Save the document by name *Roadroller-1005-Cab-A.par*. 3. Click the **Save** button. 4. Close the file. ***Hint:*** *Save all files of one project in the same folder.*