SOLID EDGE
VELOCITY SERIES

Tutorial: ***Steam pipe***

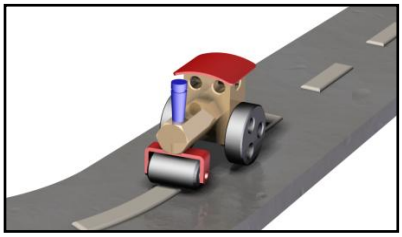

Project: ***Roadroller (Synchronous)***

cad / cam / pdm / cae | CAAP®

Solution Partner PLM | SIEMENS

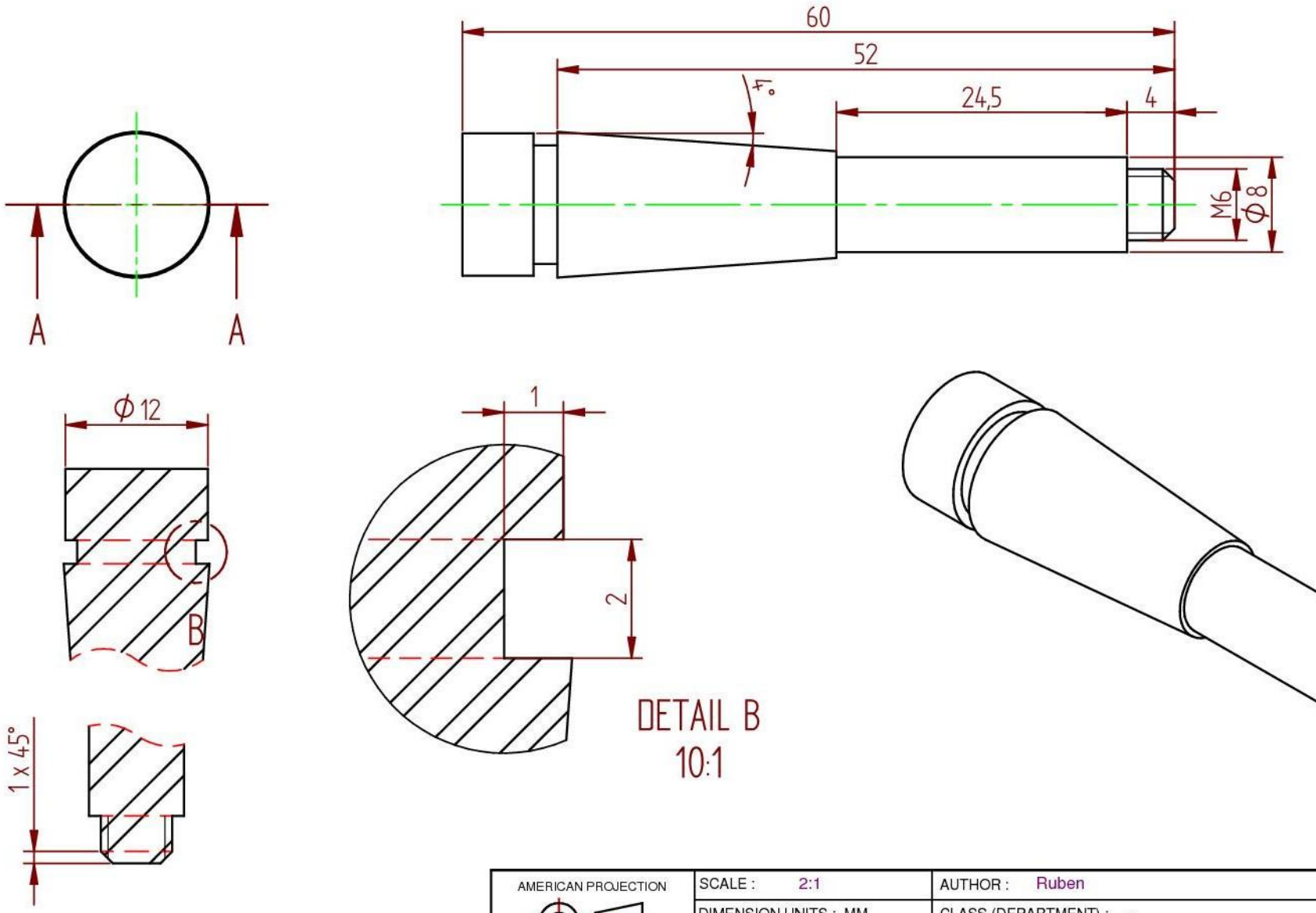

AMERICAN PROJECTION	SCALE : 2:1	AUTHOR : Ruben	CAAP Hamersveldseweg 65, 3833 GL Leusden, +31(0)33-4573322, www.caap.nl
	DIMENSION UNITS : MM	CLASS (DEPARTMENT) : -	
	DATE : 22-8-2011	CHECKED BY : -	

MATERIAL : Steel	TITEL : Steampipe	NUMBER : 1004	REV: A	SIZE: A4
PROJECT: Roadroller				

1 +	1. Start **Solid Edge.** 2. Click on **<u>ISO Part.</u>** 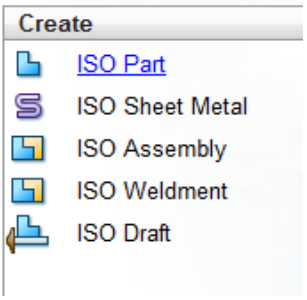	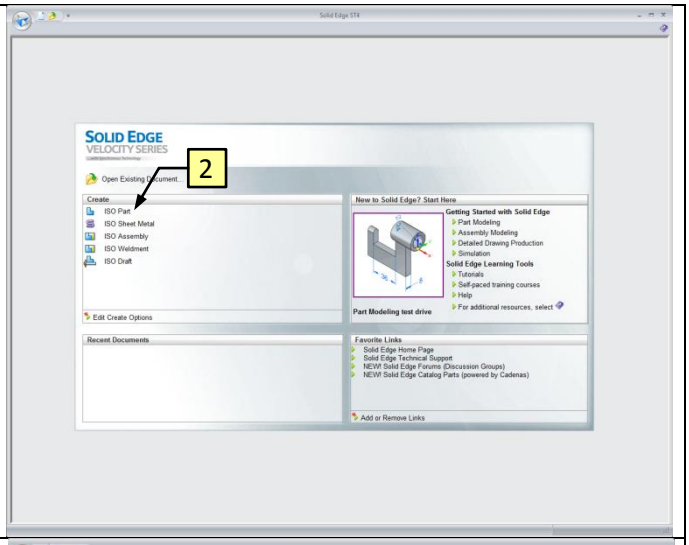
2 +	1. Click the **Line** button. 2. When you hover over the plane, it will turn red. Click on the Plane Lock.	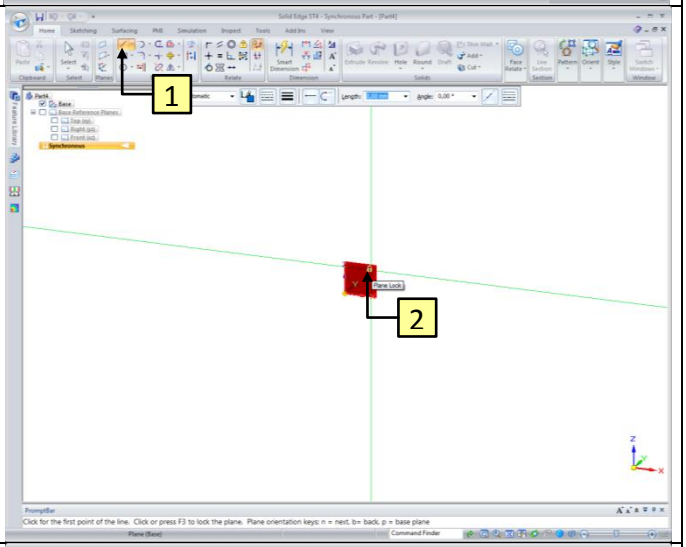
3	3. Draw the profile, as shown. Wait until the icon appears before clicking the last line.	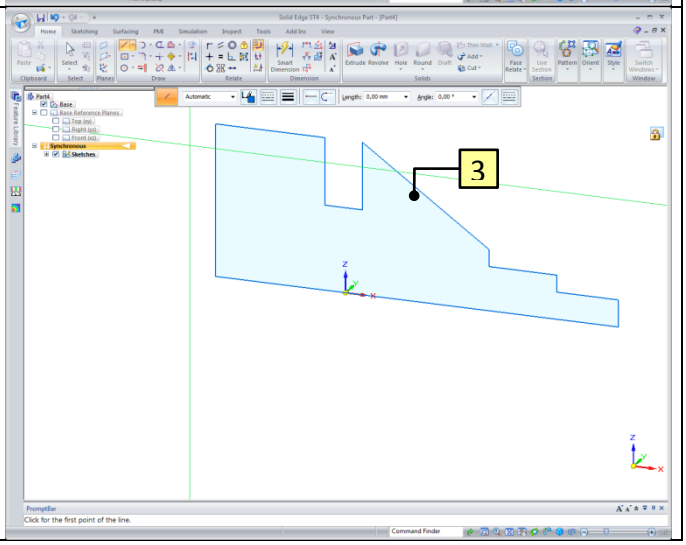

4	4. Click the **Connect** button. 5. Point at the centre point of the horizontal line. Wait until the icon appears before clicking.	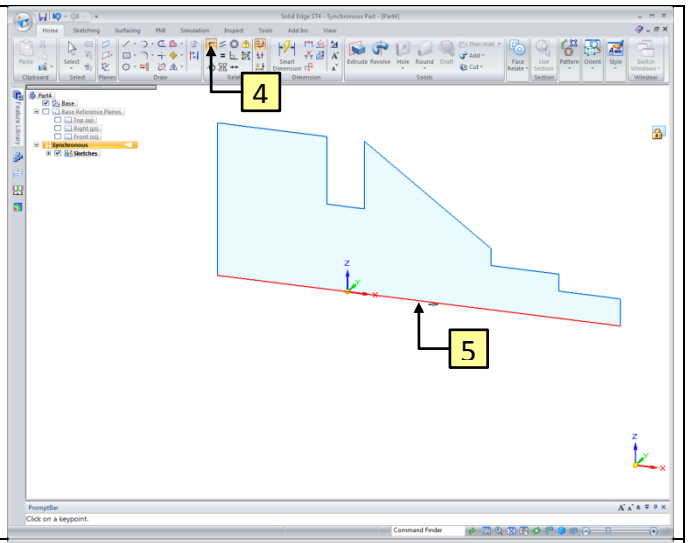
5	6. Point at the **Origin** and wait until the icon appears before clicking.	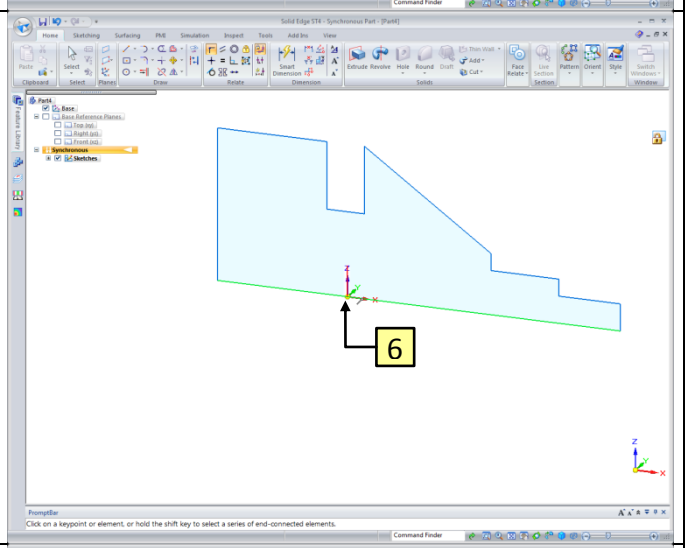
6	1. Click the **Horizontal/Vertical** button. 2. Point at the top point of the vertical line, as shown. Wait until the icon appears before clicking.	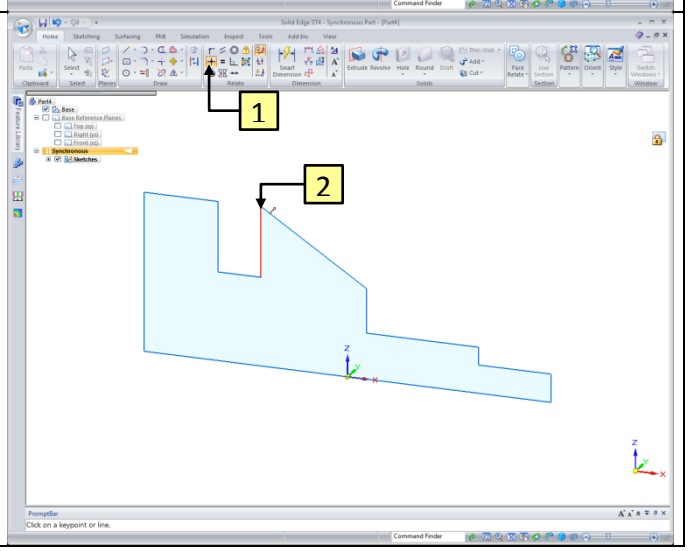

7	3. Point at the top point of the opposite vertical line, as shown. Wait until the icon appears before clicking.	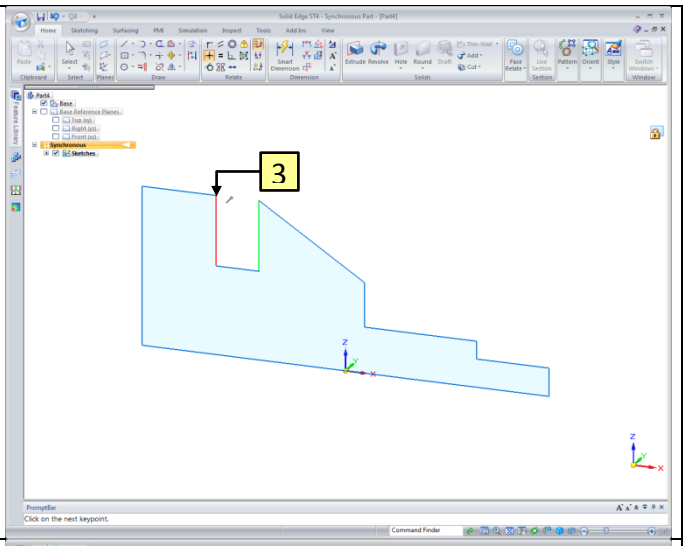
8	1. Click the **Select** button. 2. When you hover over the Region it will turn red. Click on the Region, as shown.	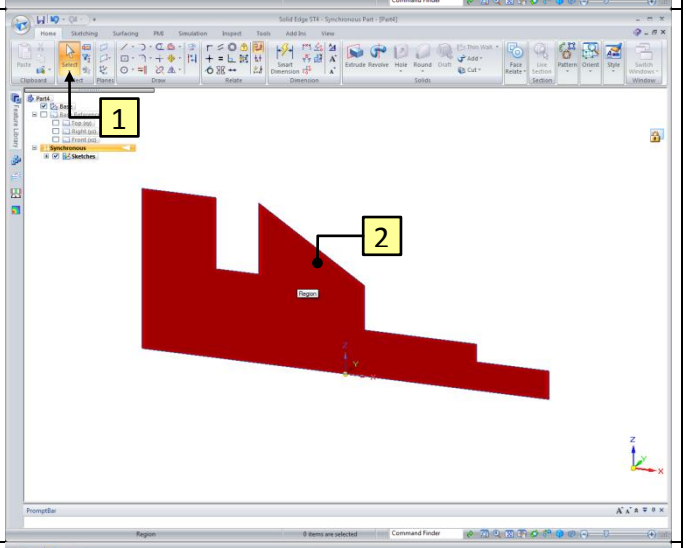
9	3. Click the **Revolve** button.	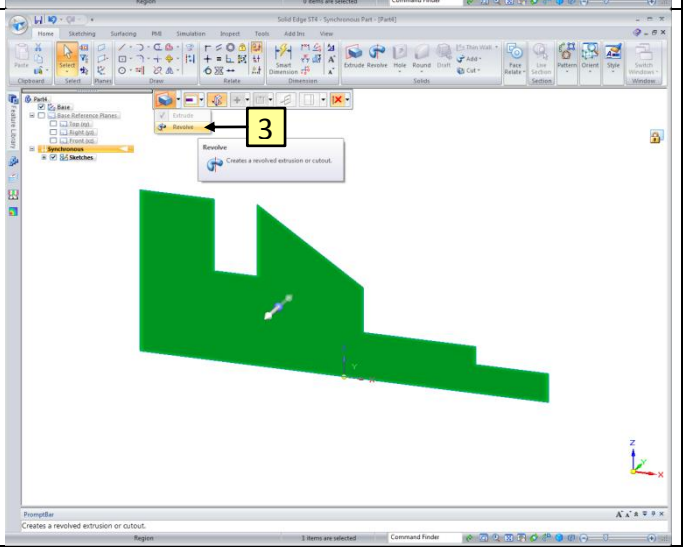

10	4. Click on the blue point of the Steering Wheel. 5. Point the cursor at the horizontal line and click to place the Steering Wheel.	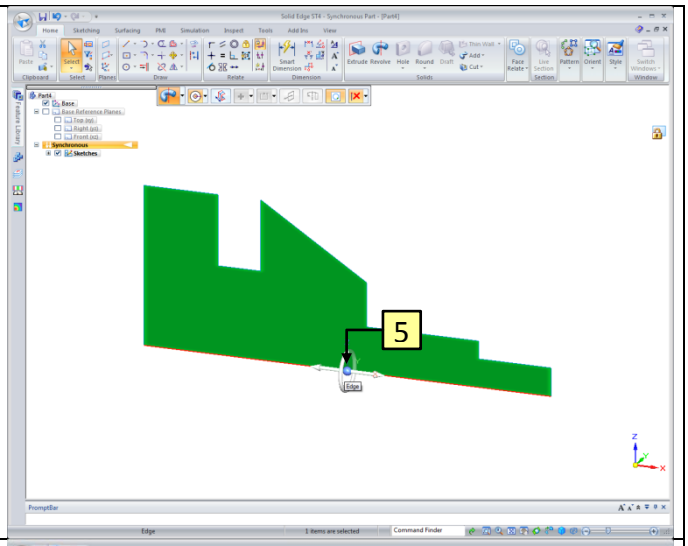
11	6. Click the **360** button.	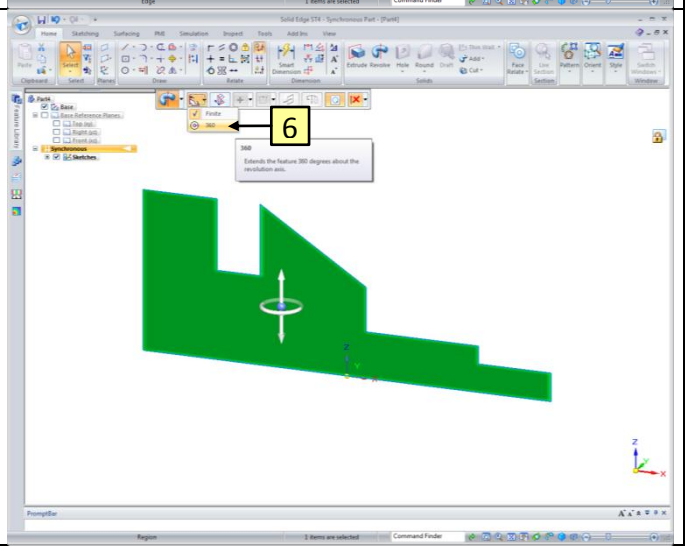
12	7. When you hover over the **Torus** of the Steering Wheel, it will turn red. Click on the **Torus**, as shown.	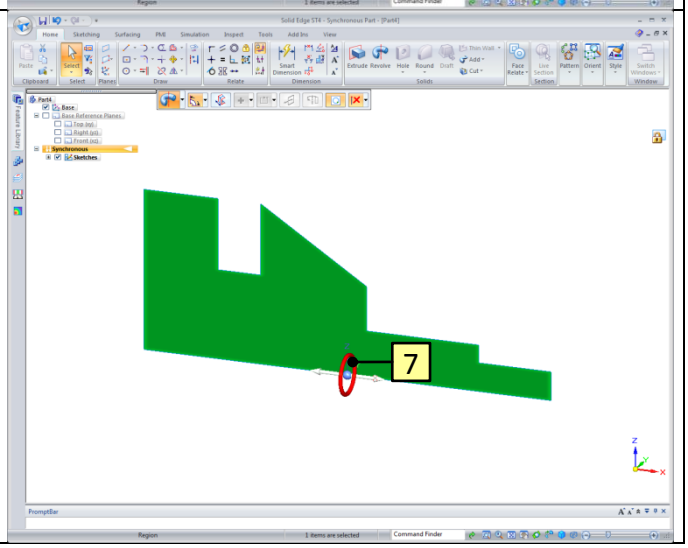

13 	1. Click the **Smart Dimension** button. 2. Click on the horizontal line.	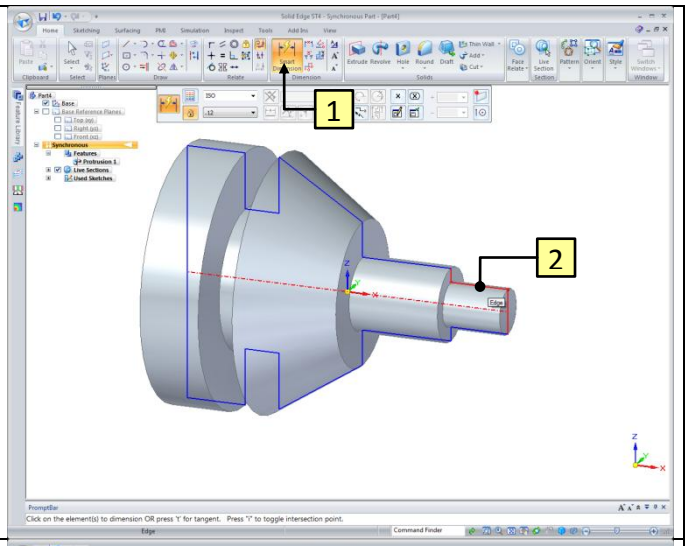
14 	3. Click to place the dimension.	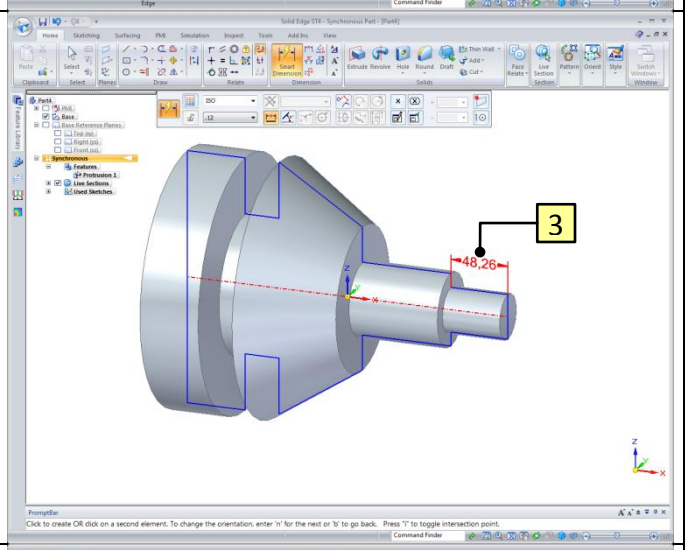
15 	4. Make sure the right green arrow is selected. 5. Click the lock icon to lock the dimension. 6. Key in the value **4** and confirm with **Enter**.	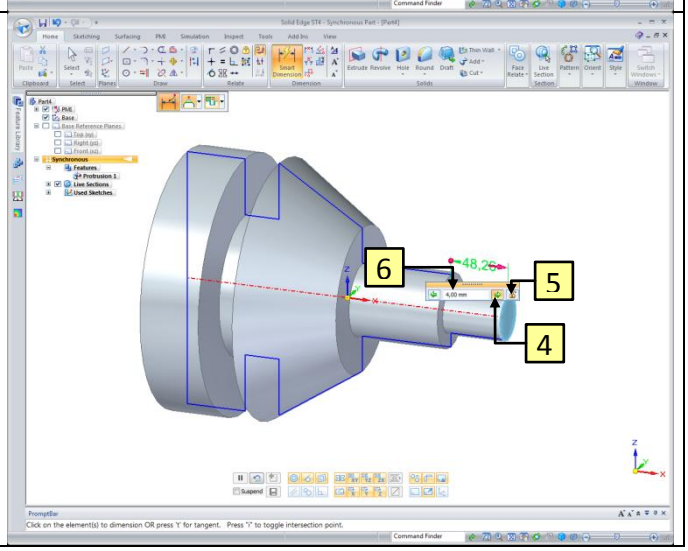

16	If the **Smart Dimension** is still active. 1. Click the horizontal line, as shown. 2. Click to place the dimension.	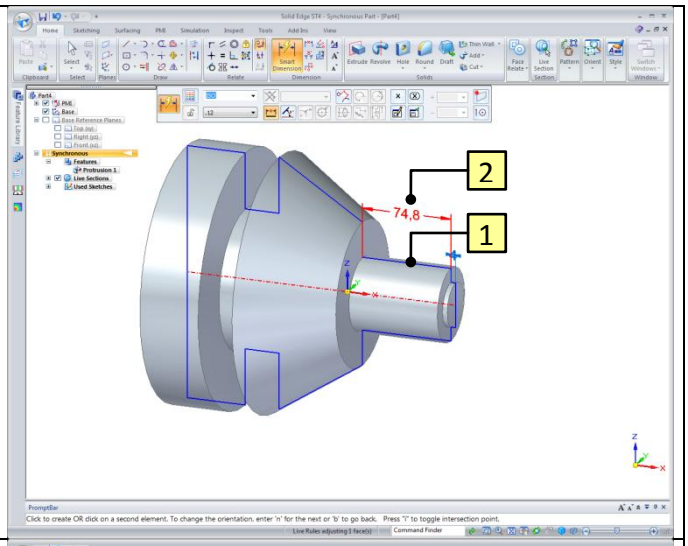
17	3. Make sure the right green arrow is selected. 4. Click the lock icon to lock the dimension. 5. Key in the value **24,5** and confirm with **Enter**.	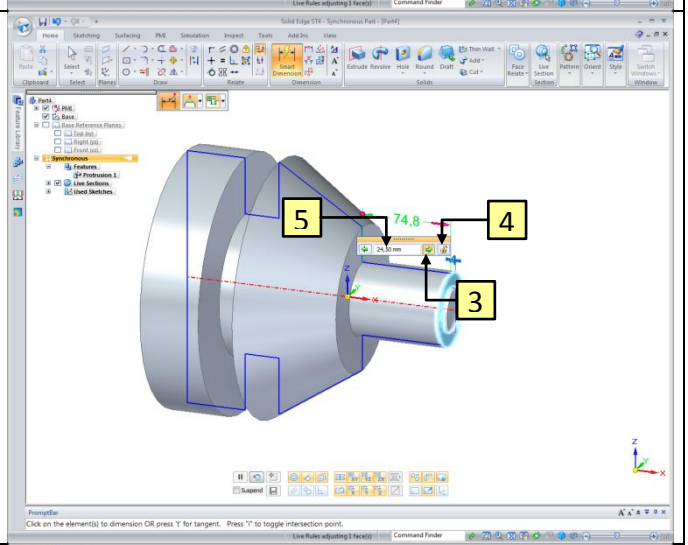
18	1. Click the right vertical line. 2. Click the other verticale line, as shown. 3. Click to place the dimension.	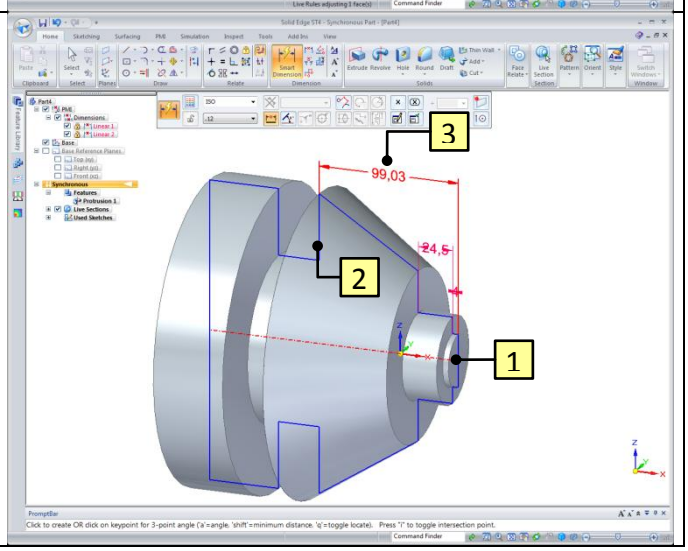

19 	4. Make sure the left green arrow is selected. 5. Click the lock icon to lock the dimension. 6. Type **52** and confirm with **Enter**.	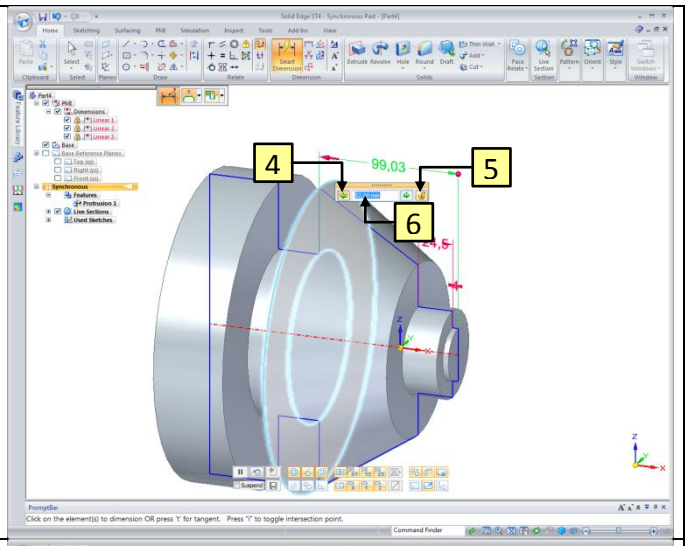
20 	1. Click the horizontal line, as shown. 2. Click to place the dimension.	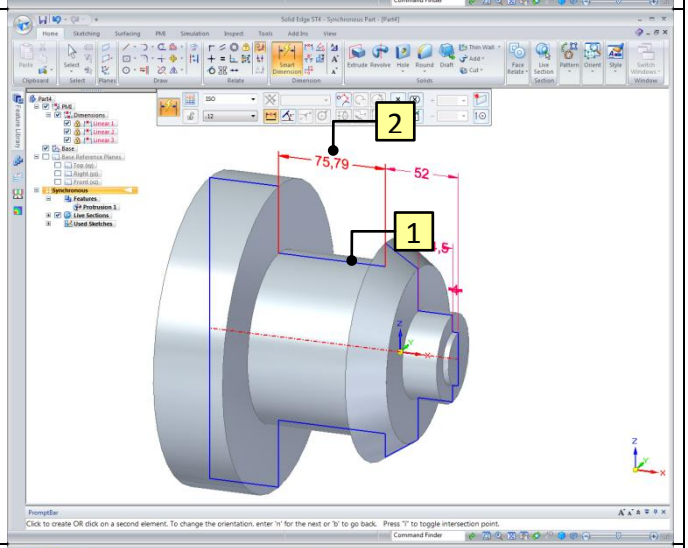
21 	3. Make sure the right green arrow is selected. 4. Click the lock icon to lock the dimension. 5. Key in the value **2** and confirm with **Enter**.	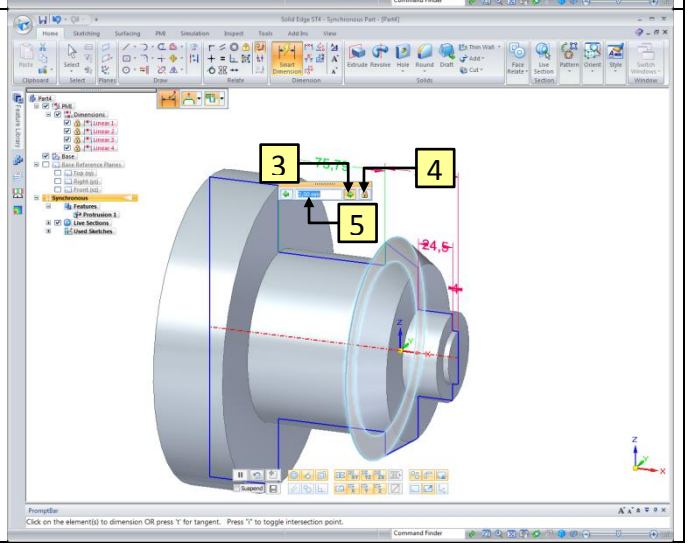

22	1. Click the right vertical line. 2. Click the left verticale line, as shown. 3. Click to place the dimension.	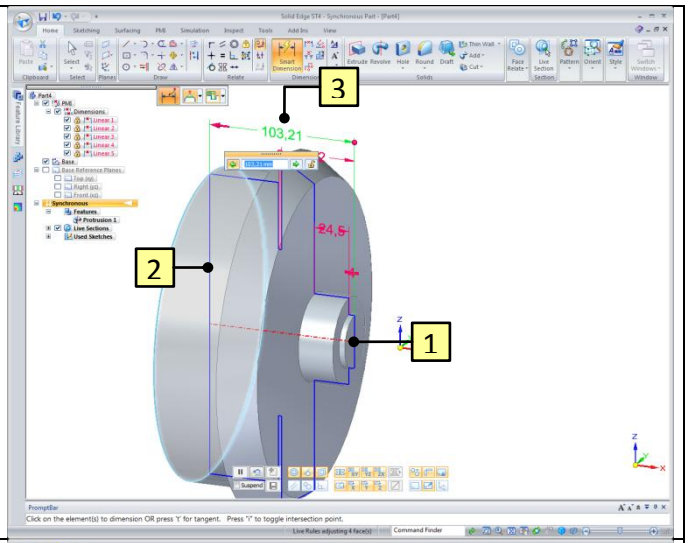
23	4. Make sure the left green arrow is selected. 5. Click the lock icon to lock the dimension. 6. Key in the value **60** and confirm with **Enter**.	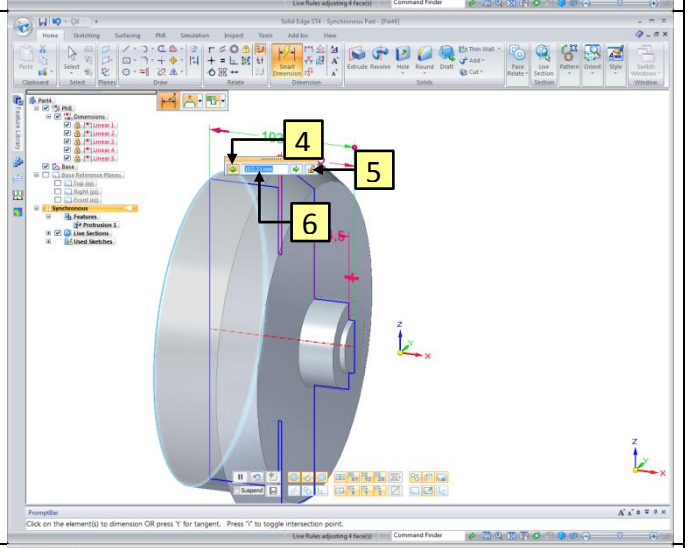
24	1. Click the **Select** button. 2. Click on **Protrusion** in the PathFinder.	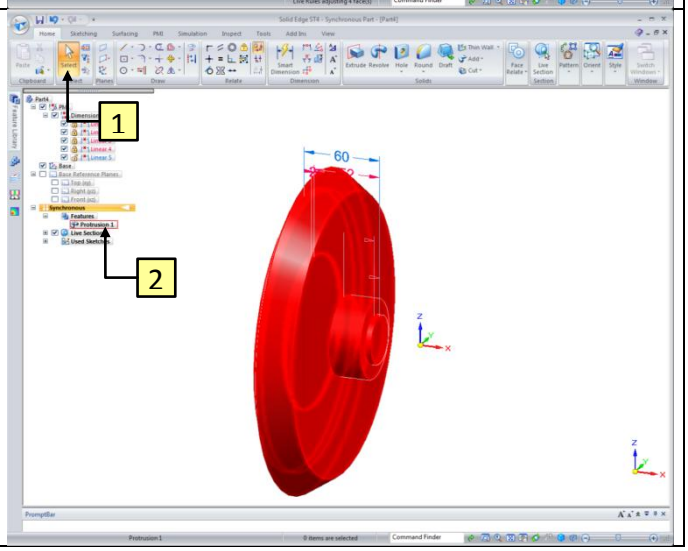

25	3. Click on the blue point of the Steering Wheel.	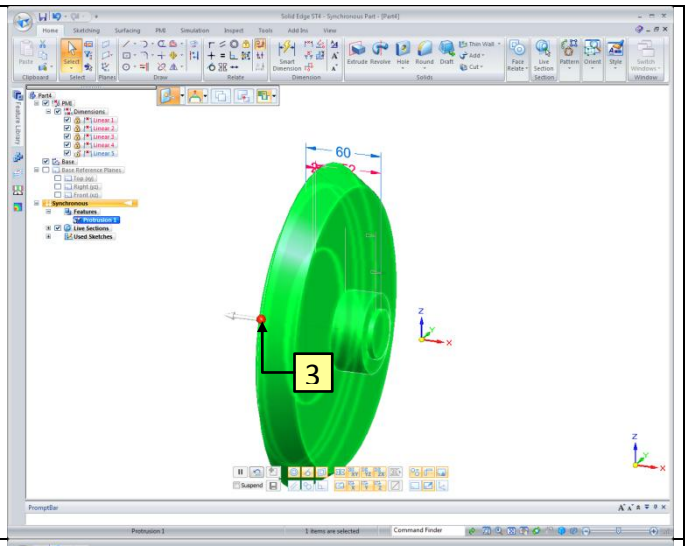
26	4. Point the cursor at the edge. Wait until the icon appears before clicking.	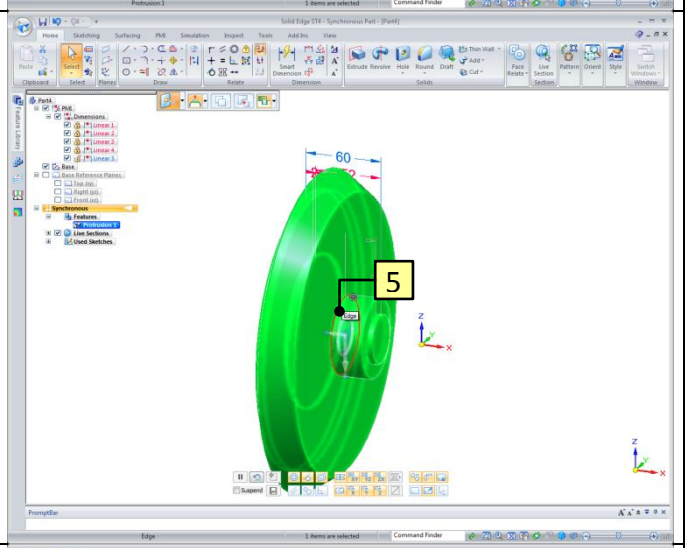
27	5. When you hover over the arrow, it will turn red. Click on the arrow, as shown.	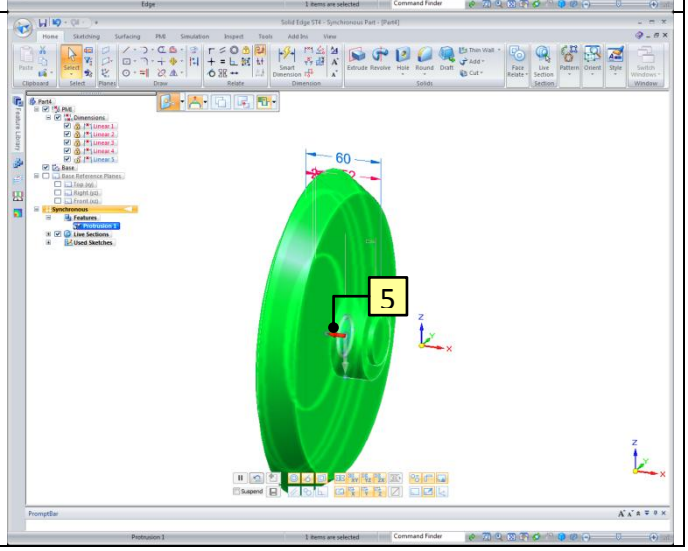

28	6. Select the **All** button.	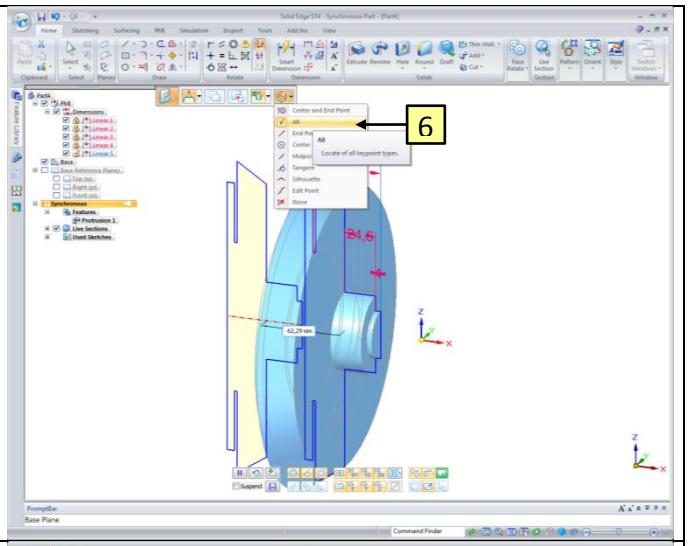
29	7. Point at the **Origin** and wait until the icon appears before clicking.	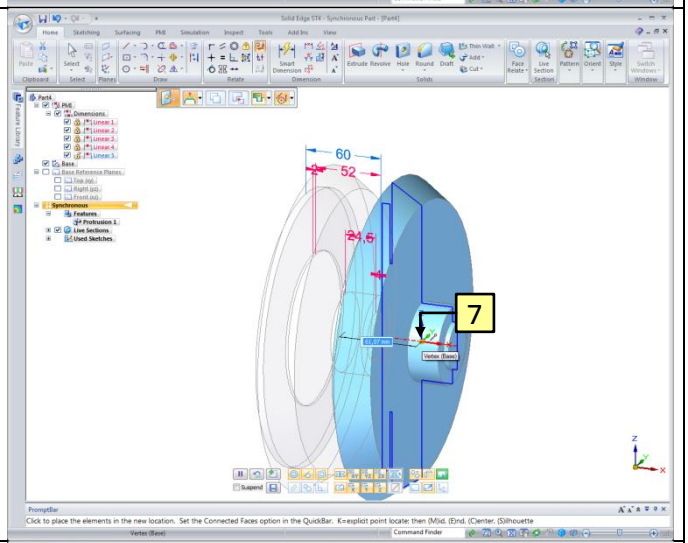
30	1. Click on the **Smart Dimension** button. 2. Click on the right vertical line. 3. Click to place the dimension. 4. Click on the lock icon. 5. Key in the value **6** and confirm with **Enter**.	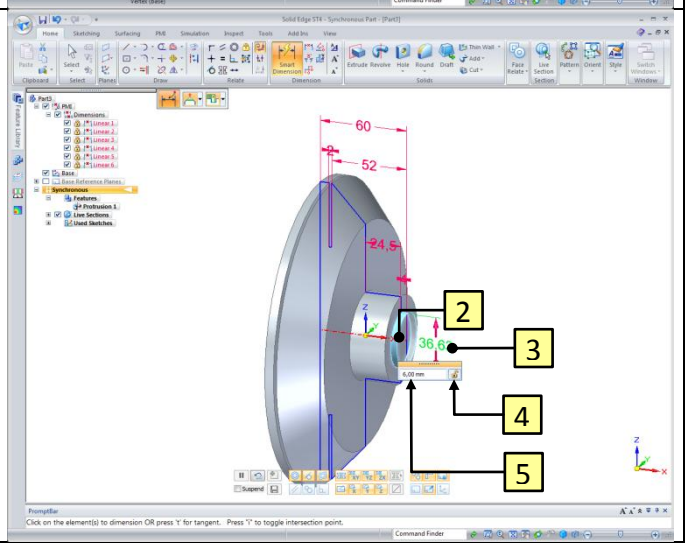

31	If the **Smart Dimension** is still active. 1. Click on the vertical line. 2. Click to place the dimension. 3. Make sure the left green arrow is selected. 4. Click the lock icon to lock the dimension. 5. Key in the value **1** and confirm with **Enter**.	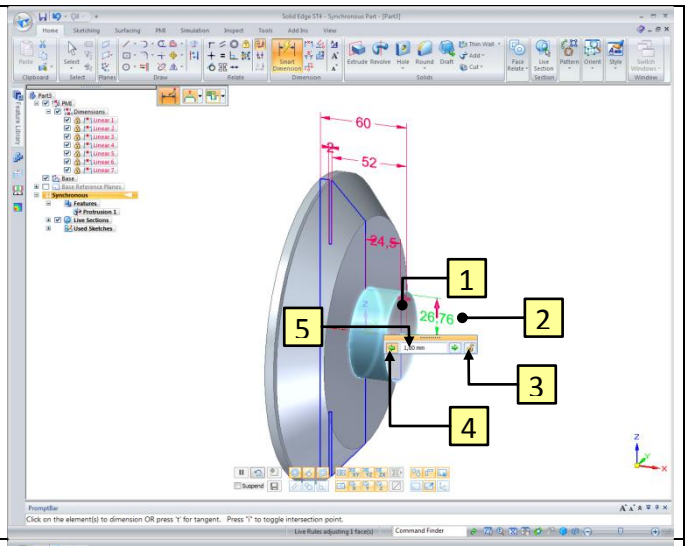
33	If the **Smart Dimension** is still active. 1. Click on the horizontal line, as shown. 2. Point the cursor at de axis of the steam pipe and click. 3. Click to place the dimension. 4. Click on the lock icon. 5. Make sure the right green arrow is selected. 6. Key in the value **5** and confirm with **Enter**.	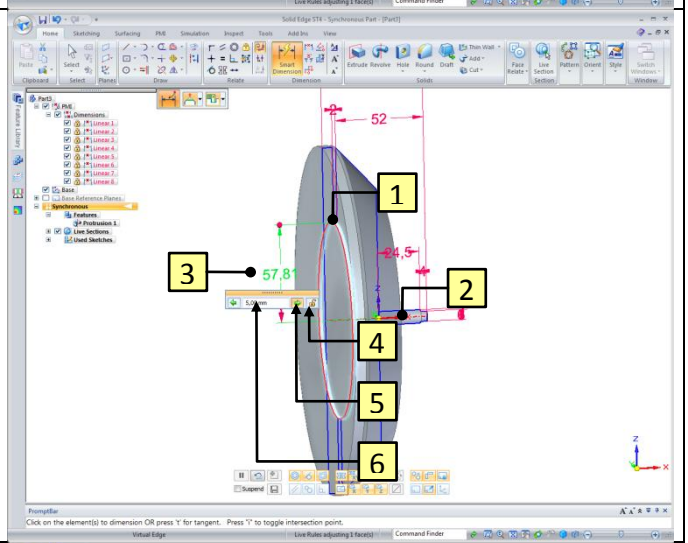
34	1. Click on the left vertical line. 2. Click to place the dimension. 3. Click on the lock. 4. Key in the value **12** and confirm with **Enter**.	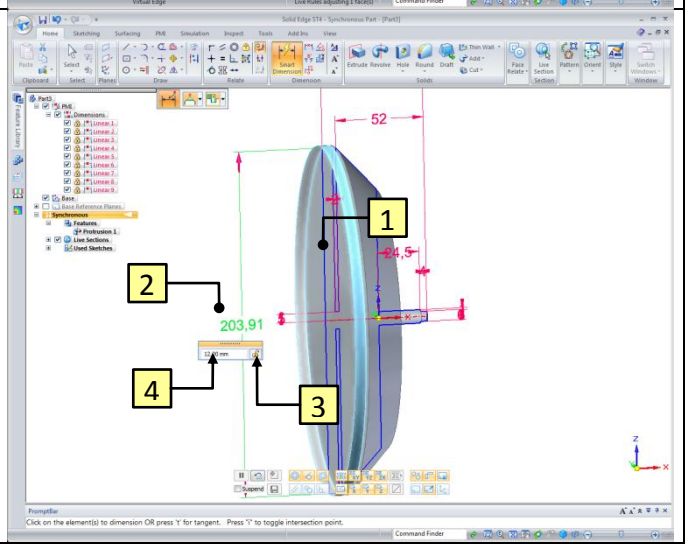

35	1. Click the **Select** button. 2. Click on the slanted line, as shown.	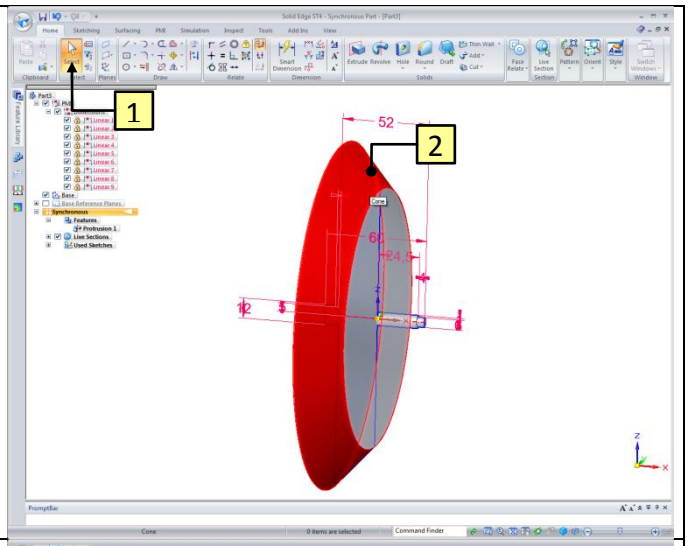
36	3. Click on the dimension.	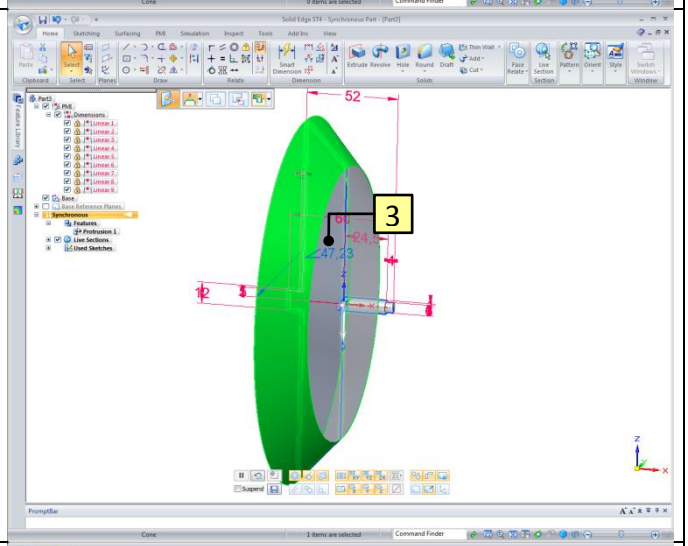
37	4. Key in the value **4** and confirm with **Enter**.	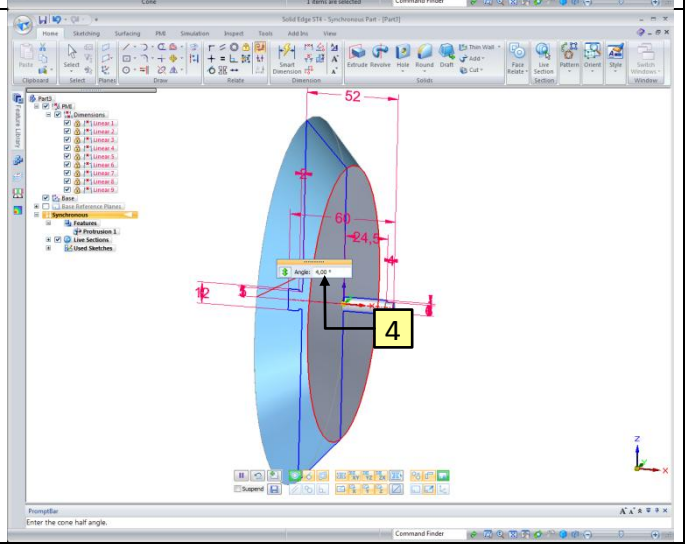

38	1. Click the **Smart Dimension** button. 2. Click on the right vertical line, as shown. 3. Click to place the dimension. 4. Make sure the **Suspend** is not selected. 5. Make sure the right green arrow is selected. 6. Click on the lock icon. 7. Key in the value **0,5** and confirm with **Enter**.	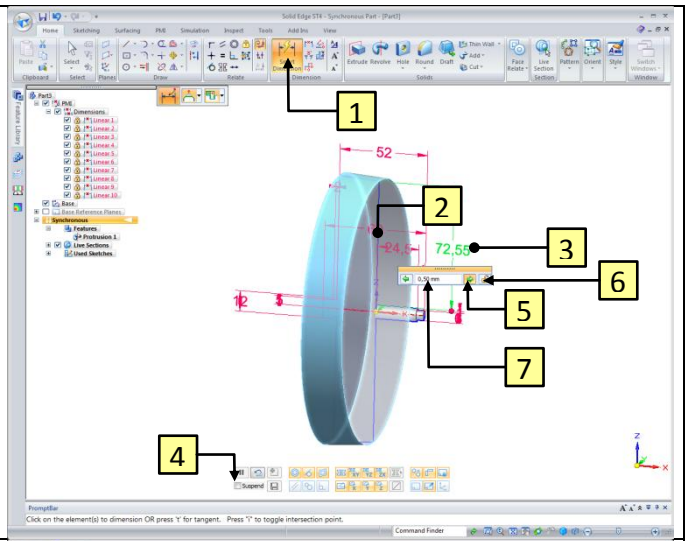
39	1. Click the **Chamfer by Equal Setbacks** button.	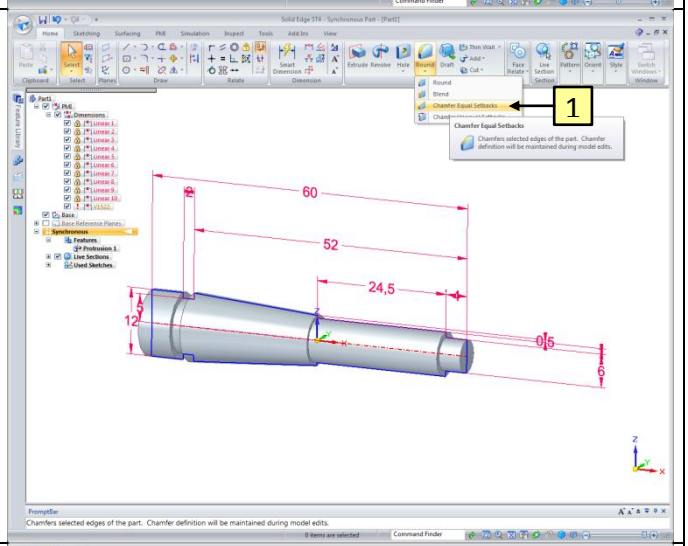
40	1. Click on the right edge of the Revolve. 2. Key in a value for the chamfer (in this case **1**) and confirm with **Enter**.	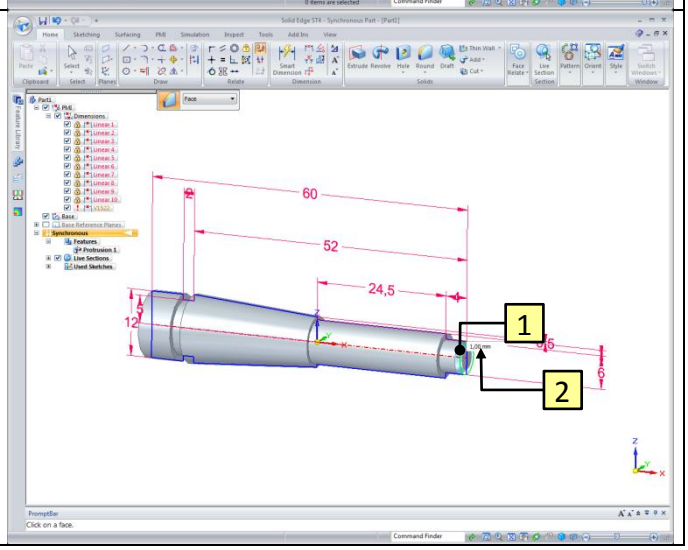

41	1. Click the **Thread** button. 2. Select the type **M6**. 3. Click on the cilinder, as shown.	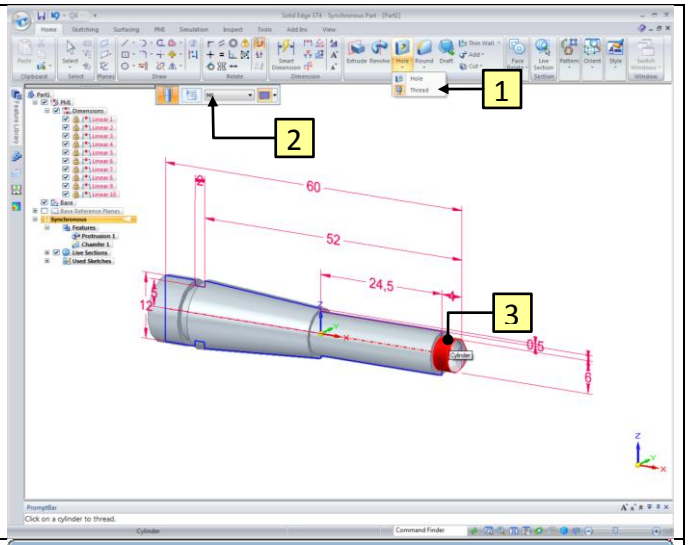
42	4. Click the **OK** button.	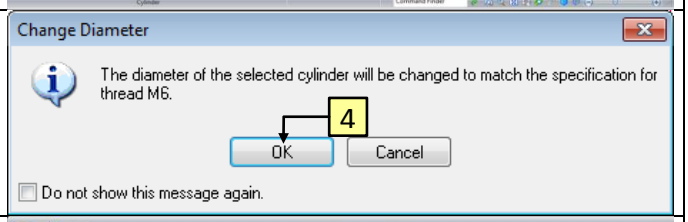
43	Now we set the material property. 1. Click the **Application Button**. 2. Click on **Properties**. 3. Click the **Material Table** button.	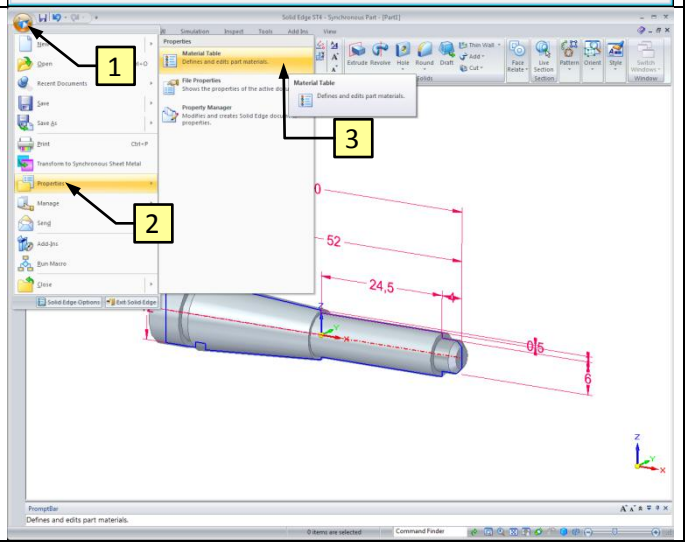

44	1. Choose the material **Steel**. 2. Click **Apply to Model** to set the material to the part. ***Hint:*** *There are several properties which are connected to a material, like color and density. The density is necessary to determine the weight.*	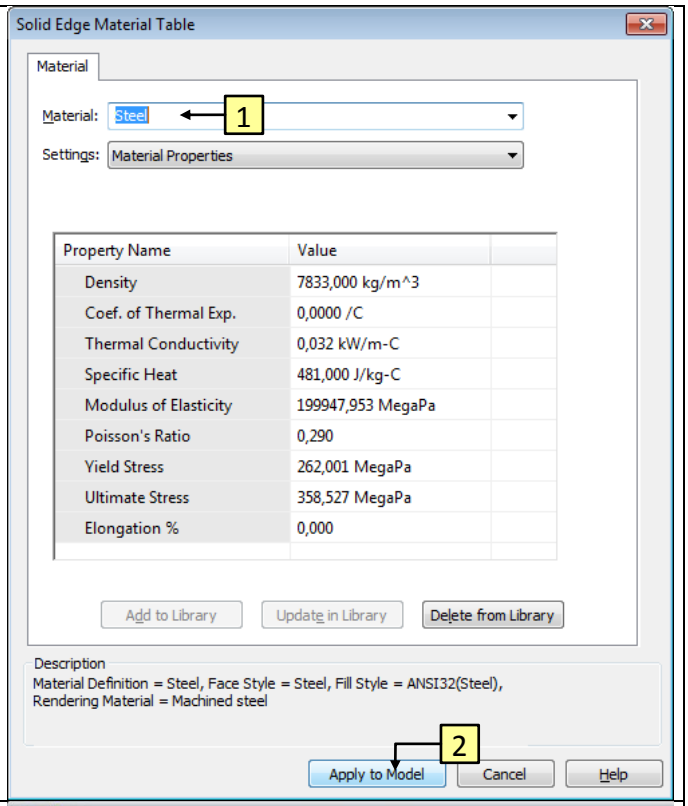
45	Now we can paint the part. 1. Click on **View → Part Painter**.	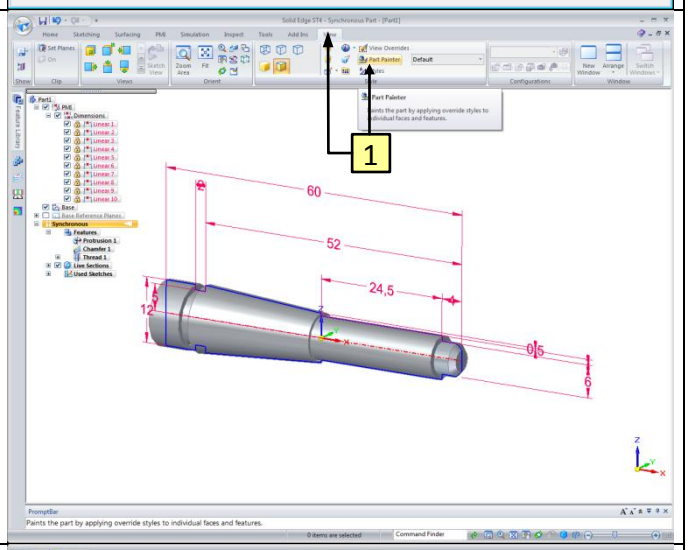
46	1. Select the style **Blue**. 2. Click on the part. 3. Click the **Close** button. ***Hint:*** *If you don't get the follow message at step 47, please set the default settings again.*	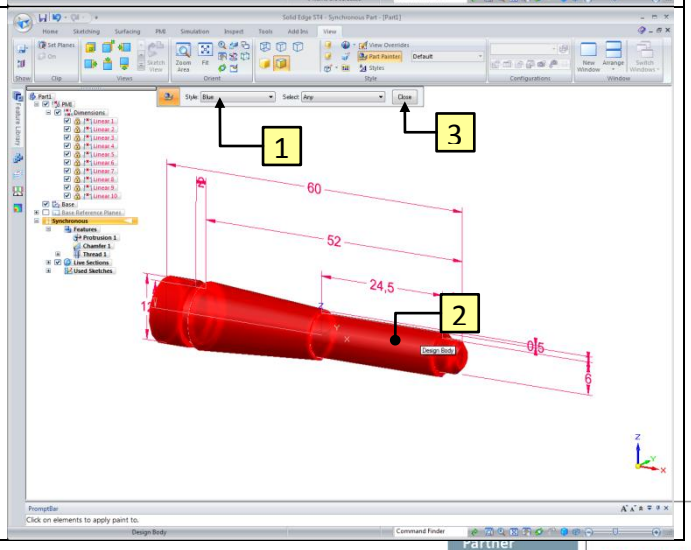

47	The part is ready. Now it must be saved. 1. First press **Ctrl + i** to turn the image to isometric view. 2. Click on the floppy icon. 3. Go to the **Summary** tab**.** 4. Fill in *Steam pipe* at Title. 5. Go to the **Project** tab and fill in the following properties: Document Number*: 1004*. Revision Number*: A*. Project Name: *Roadroller*. 6. Click **OK** to close the screen. ***Hint:*** *All properties of the part are saved at the **File Properties**. These properties will used to fill in a part list.*	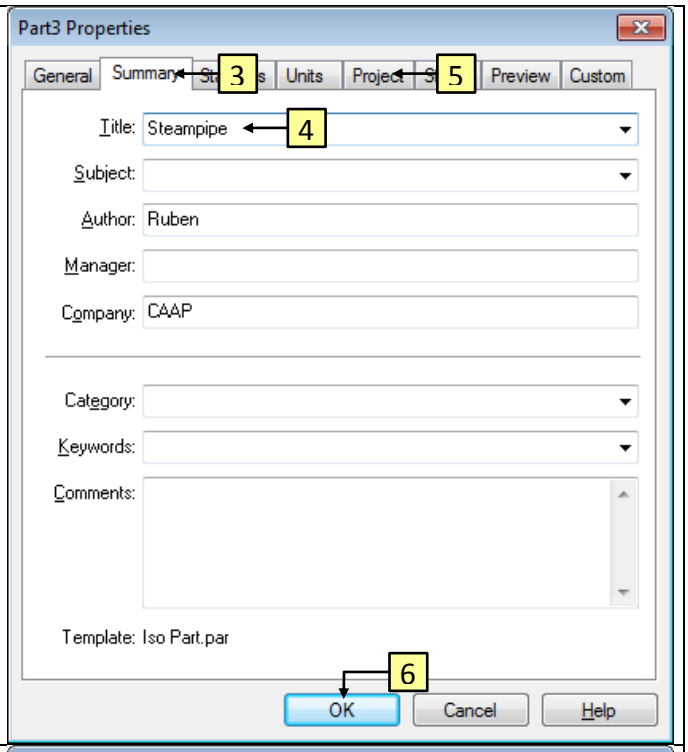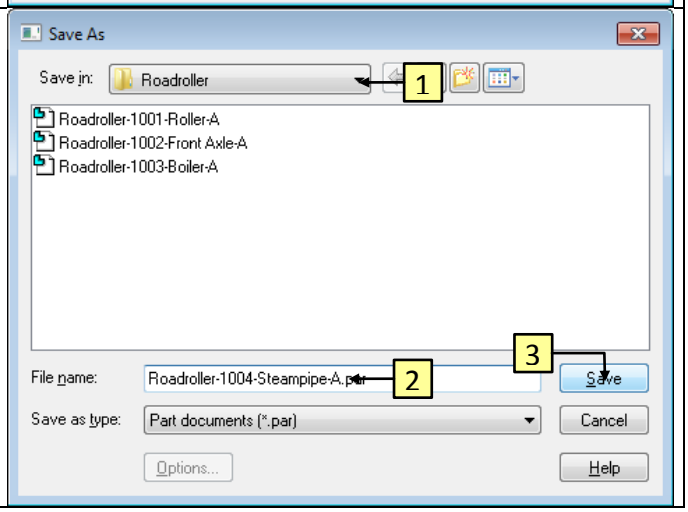
48	1. Browse to the folder *Roadroller*. 2. Save the document by name *Roadroller-1004-Steam pipe-A.par*. 3. Click the **Save** button. 4. Close the file. ***Hint:*** *Save all files of one project in the same folder.*