SOLID EDGE
VELOCITY SERIES

Tutorial: ***Steering Bracket***

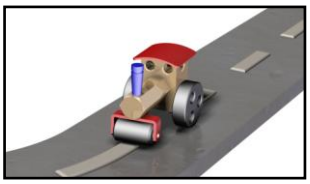

Project: ***Roadroller (Synchronous)***

cad / cam / pdm / cae | CAAP®

Solution Partner PLM | SIEMENS

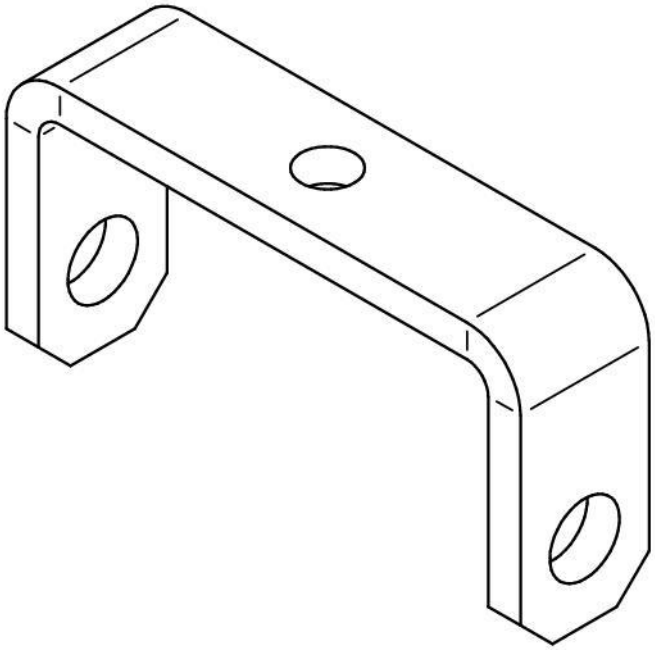

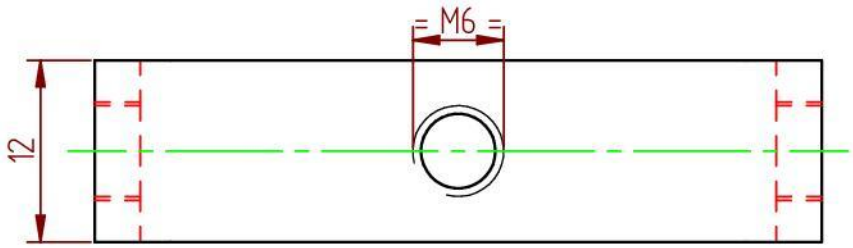

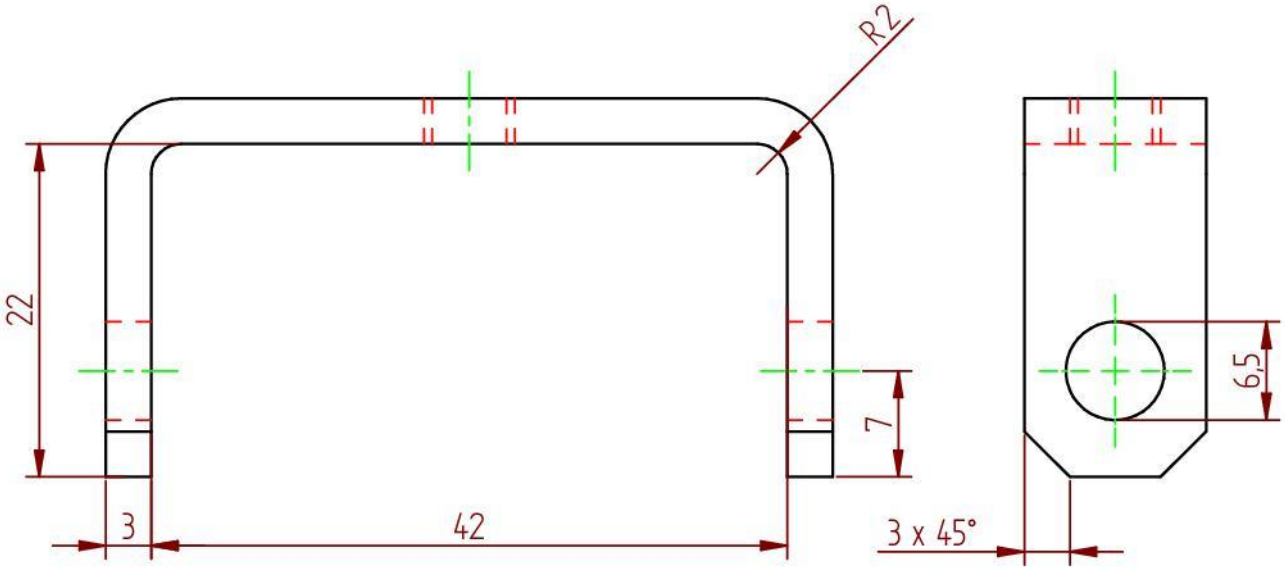

AMERICAN PROJECTION	SCALE : 2:1	AUTHOR : Ruben	CAAP Hamersveldseweg 65 3833 GL Leusden +31(0)33-4573322 www.caap.nl
	DIMENSION UNITS : MM	CLASS (DEPARTMENT) : -	
	DATE : 22-8-2011	CHECKED BY : -	

MATERIAL : Steel	TITEL :	NUMBER :	REV:	SIZE:
PROJECT: Roadroller	Steering Bracket	2001	A	A4

1 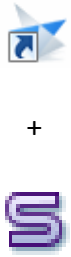	1. Start **Solid Edge.** 2. Click on **ISO Sheet Metal.** 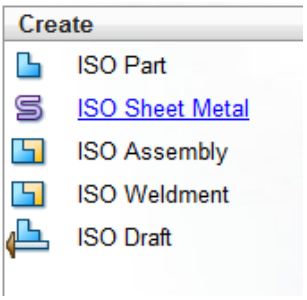	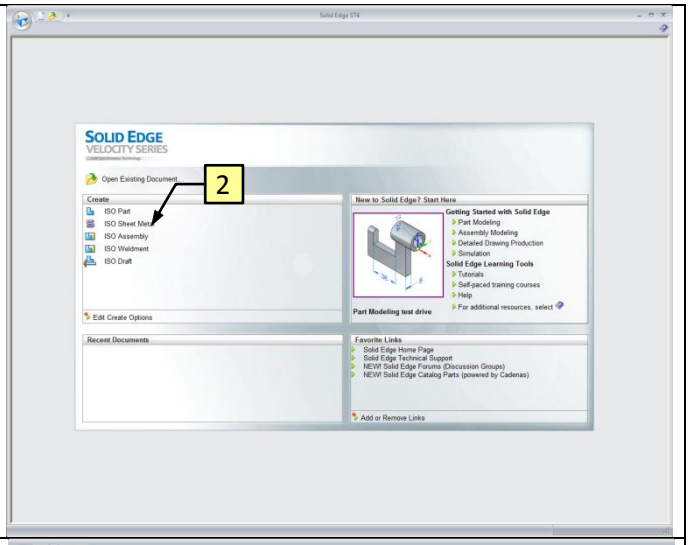
2	1. Click the **Line** button. 2. Draw the profile. Wait until the and icons appears before clicking.	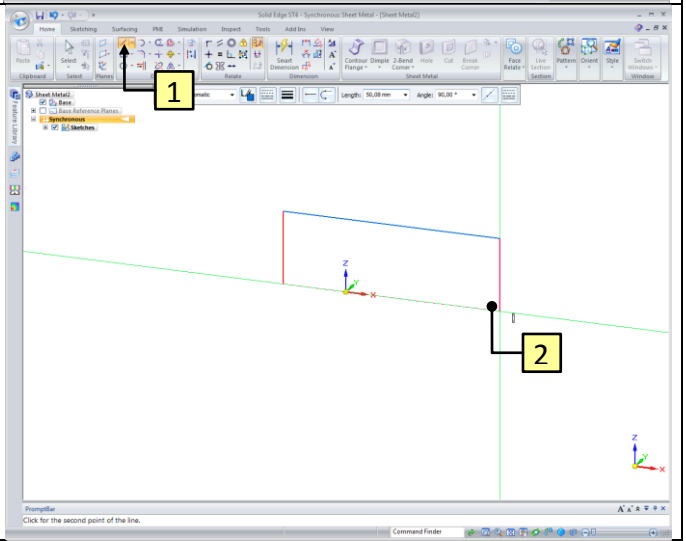
3	1. Click the **Contour Flange** button. 2. Click on **Material Table**.	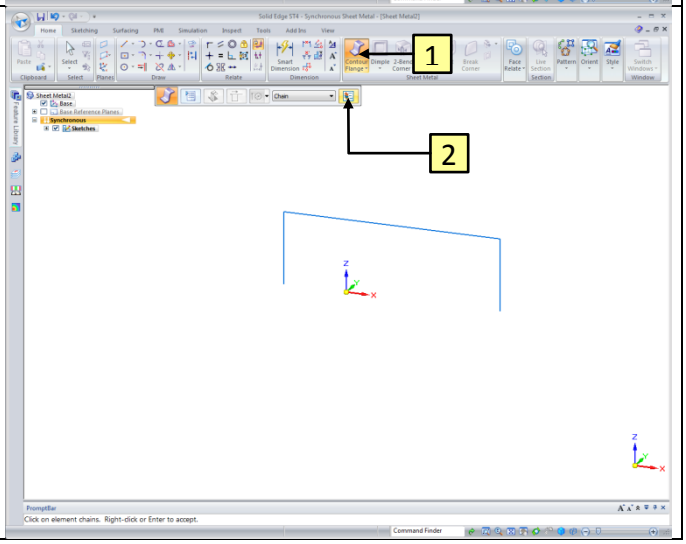

4	3. Fill in **3** at Material thickness and Relief width. 4. Fill in **2** at Bend radius. 5. Click the **Apply to Model** button.	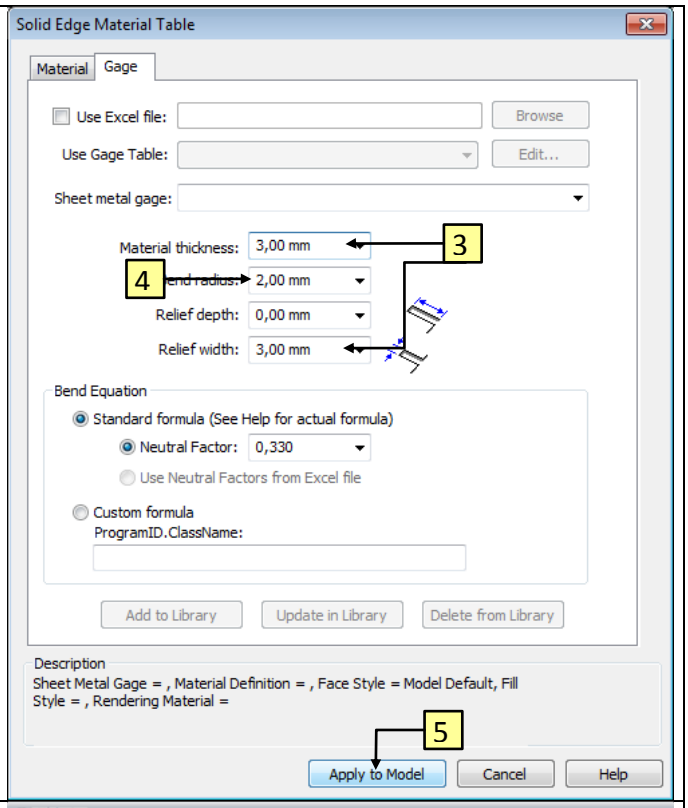
5	1. Click on the sketch. 2. When you hover over the arrow it will turn red. Click on the arrow, as shown.	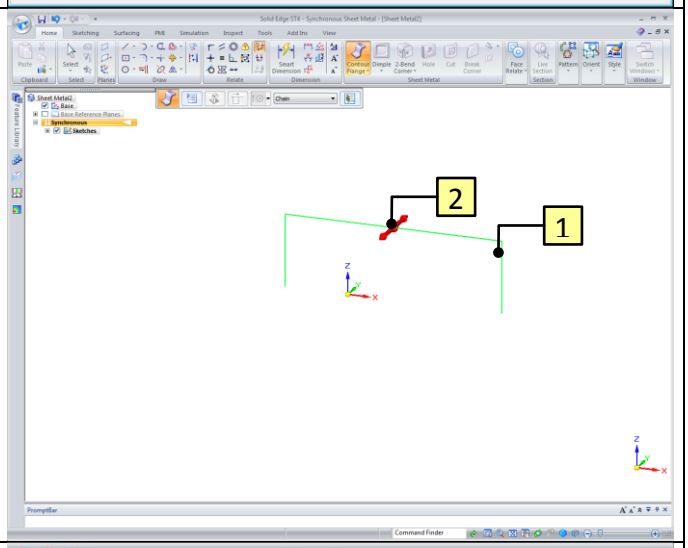
6	1. Make sure the arrow is up. 2. Click the **Symmetric Extent** button. 3. Key in the value **12** and confirm with **Enter**.	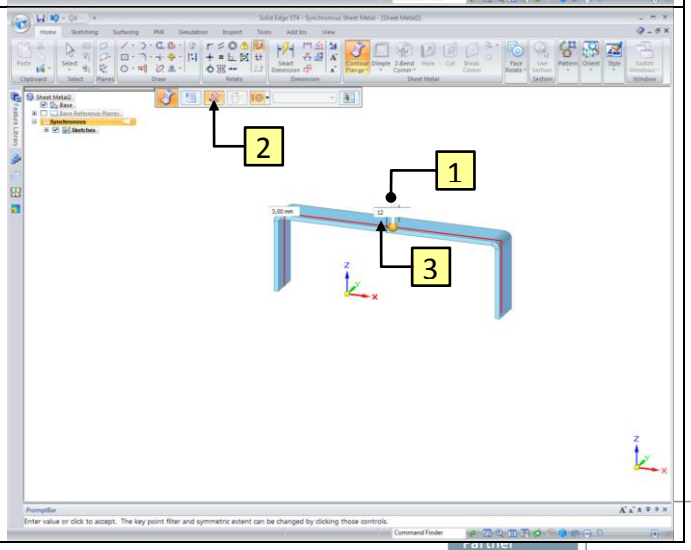

7	1. Click the **Smart Dimension** button. 2. Click on the inner left vertical line. 3. Click on the inner righter vertical line. 4. Click to place the dimension. 5. Make sure the right green arrow is selected. 6. Key in the value **42** and confirm with **Enter**.	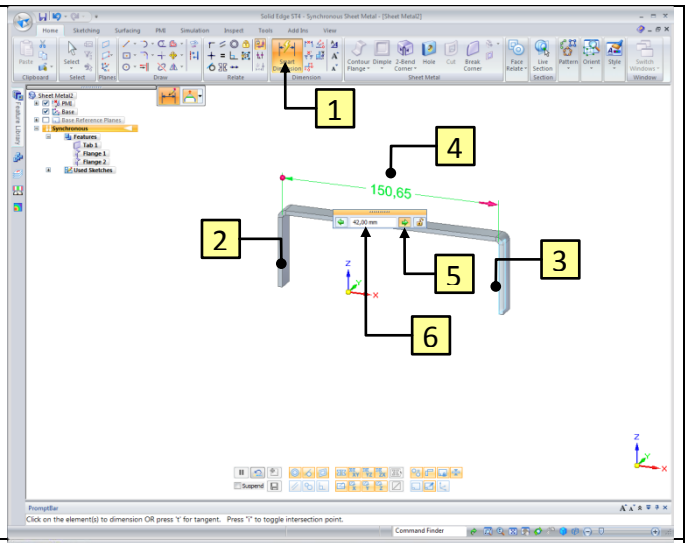
8	If the **Smart Dimension** is still active. 1. Click on the horizontal line, as shown. 2. Click on the horizontal line below. 3. Click to place the dimension. 4. Make sure the right green arrow is selected. 5. Key in the value **22** and confirm with **Enter**.	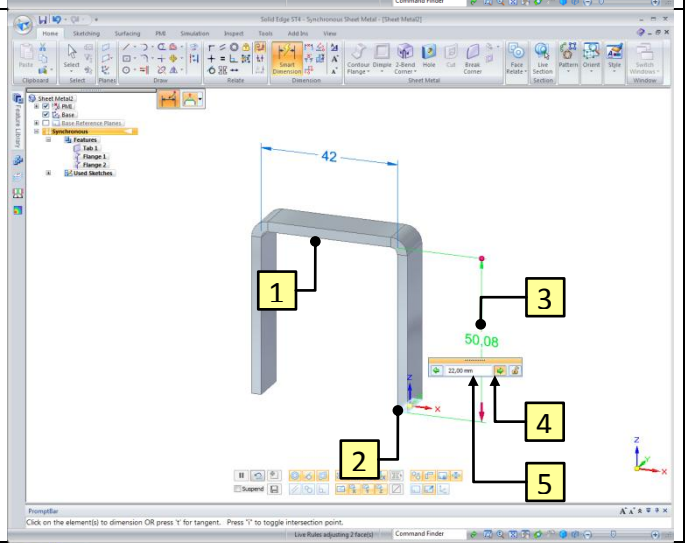
9	1. Click the **Select** button. 2. Select the **Tab** and **Flanges** in the PathFinder. 3. Click on the blue point of the Steering Wheel. 4. Point at the middle of the horizontal line. Wait until the icon appears before clicking.	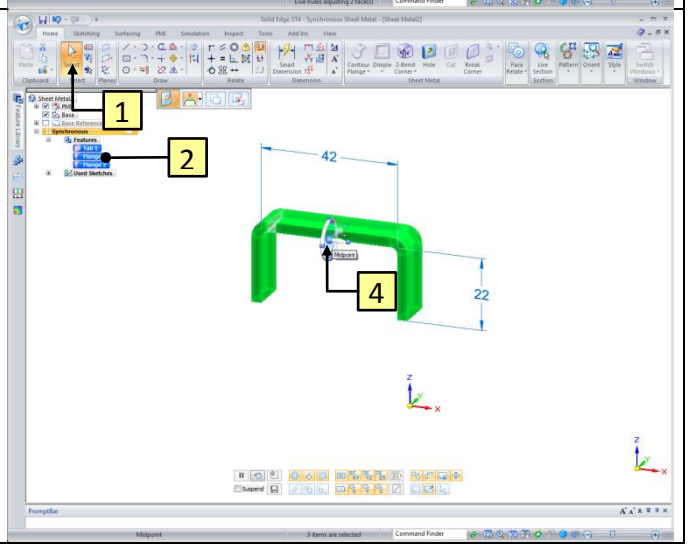

10	5. When you hover over the arrow it will turn red. Click on the arrow, as shown.	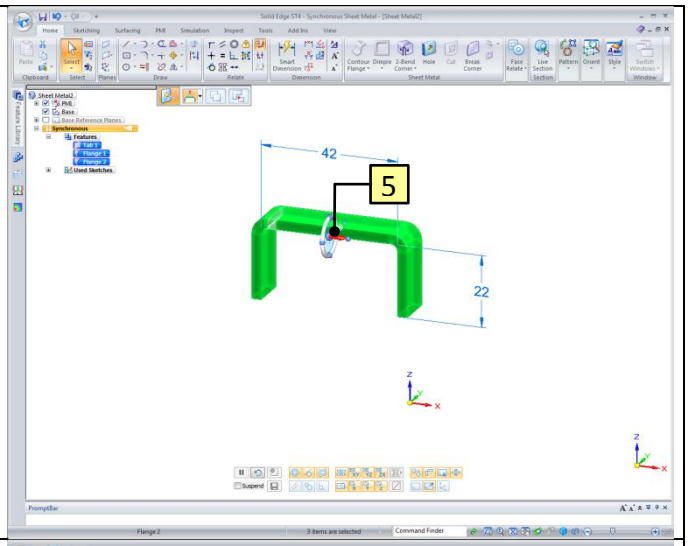
11	6. Click on the **All** type option. 7. Point at the **Origin** and wait until the icon appears before clicking.	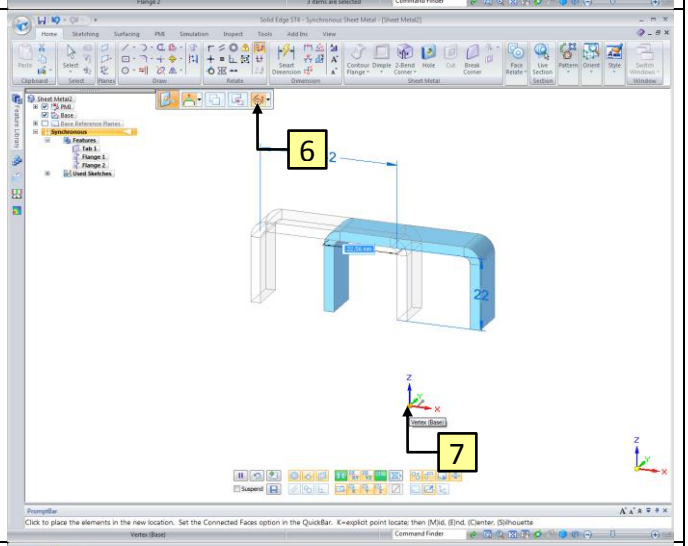
12	1. Click on the blue point of the Steering Wheel. 2. Point at the middle of the vertical line. Wait until the icon appears before clicking.	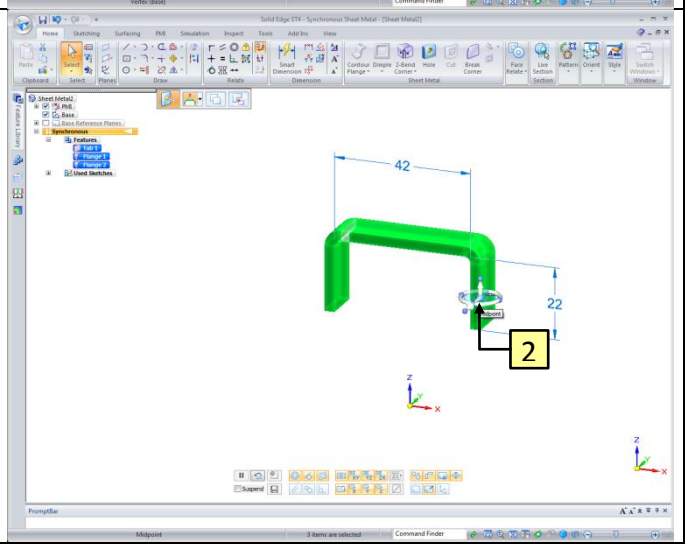

13	3. When you hover over the arrow it will turn red. Click on the arrow, as shown.	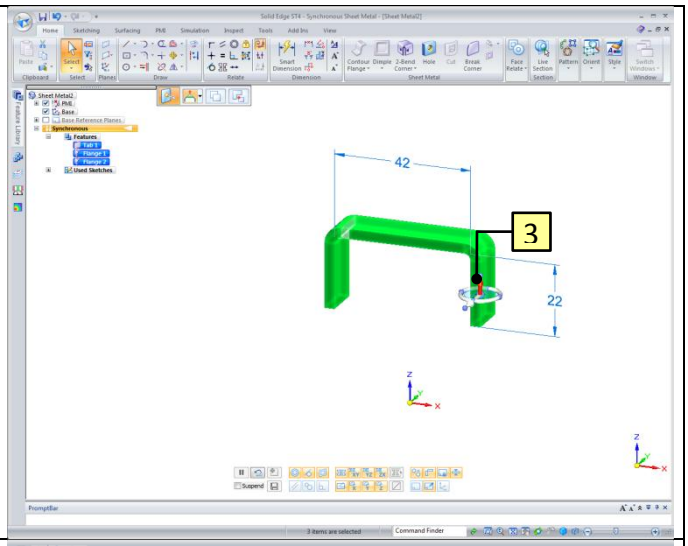
14	4. Point at the **Origin** and wait until the icon appears before clicking.	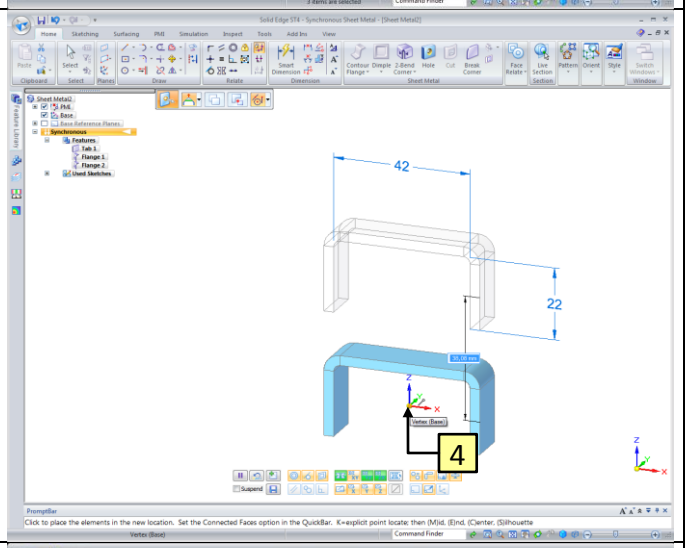
15 +	1. Click the **Break Corner** button. 2. Click on **Break Corner – Chamfer Corner**. 3. Select the ribs, as shown. 4. Key in the value **3** and confirm with **Enter**.	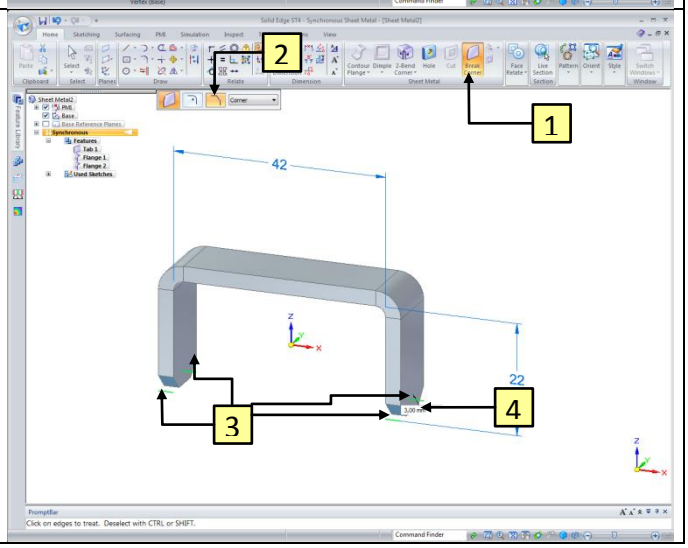

16 + 	1. Click the **Hole** button. 2. Click the **Hole Options** button.	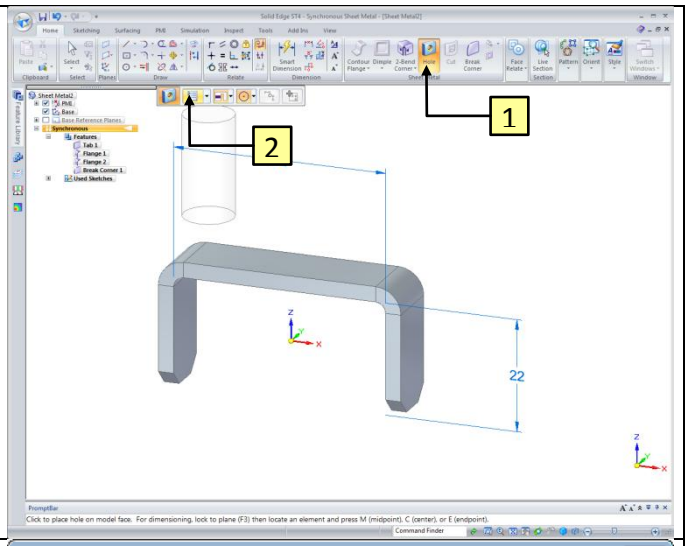
17 + 	Fill in the Hole Options, as shown. 3. Type: **Simpel**; 4. Diameter: **6,5**; 5. Extents: **Through All**; 6. Click the **OK** button.	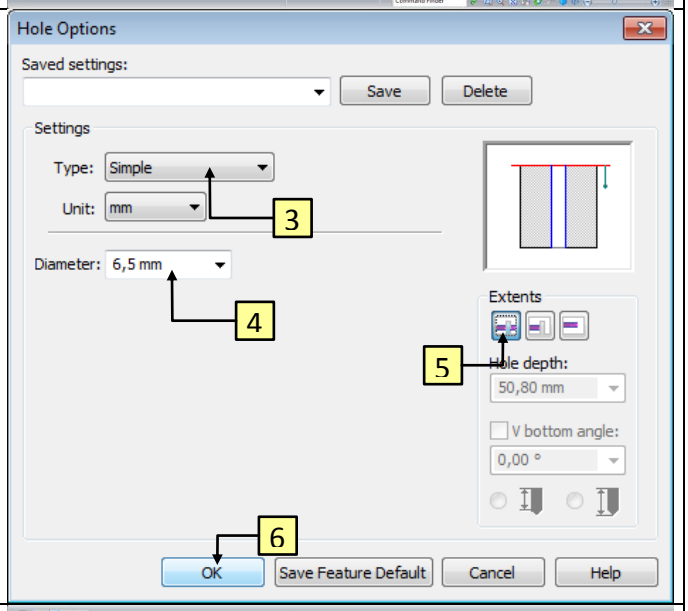
18 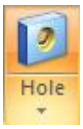	7. Point at the right plane as shown, and click to place the Hole.	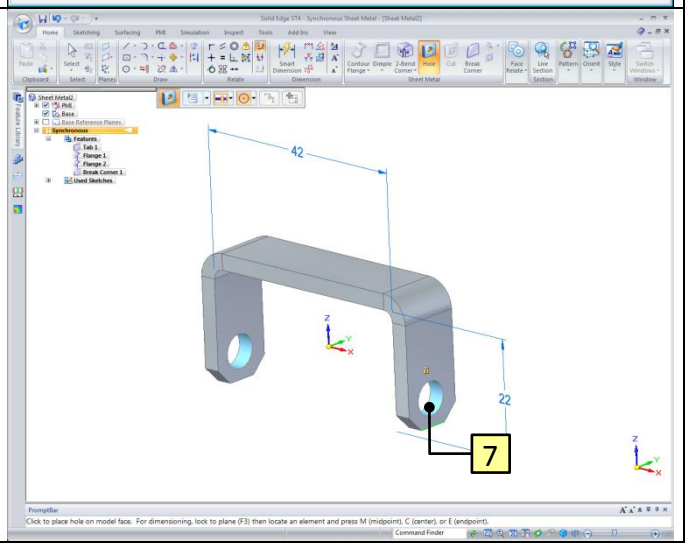

19	1. Click the **Select** button. 2. When you hover over the arrow it will turn red. Click on the arrow, as shown.	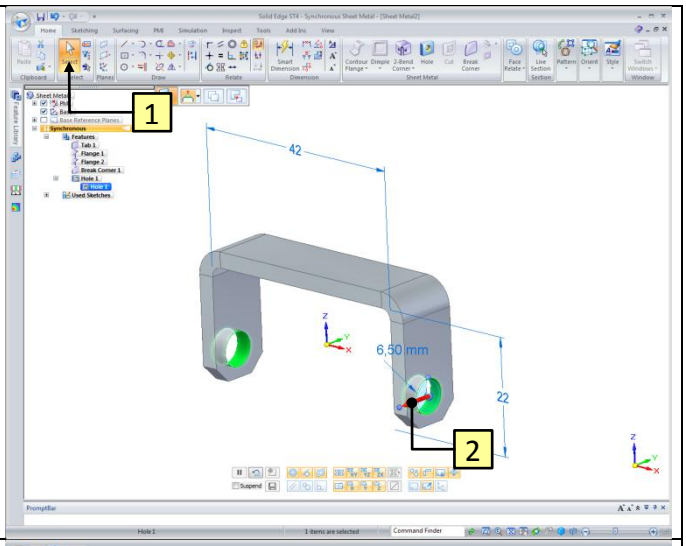
20	3. Click on the **Midpoint** option.	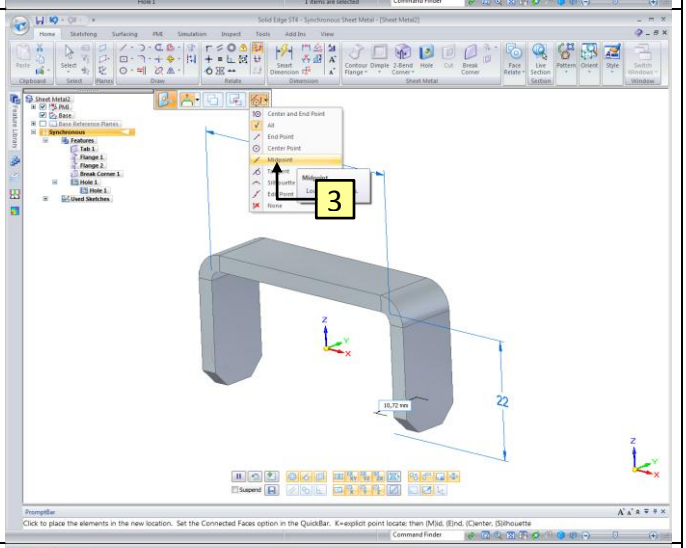
21	4. Point at the middle of the line. Wait until the icon appears before clicking.	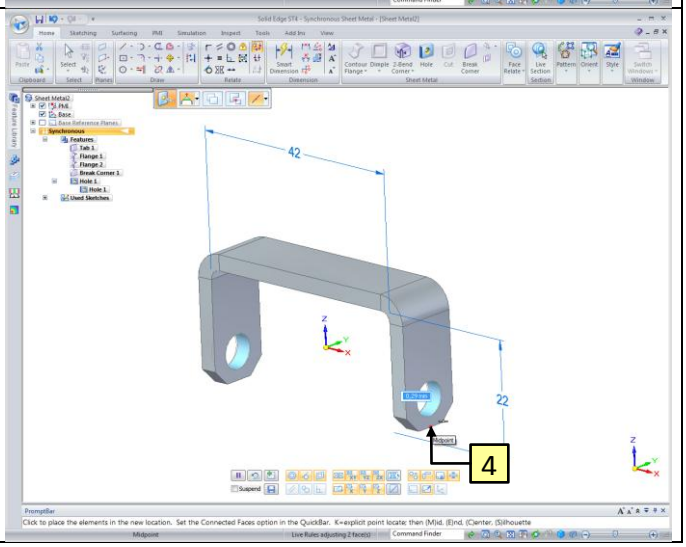

22	1. Click the **Smart Dimension** button. 2. Click on the edge of the Hole. 3. Click on the horizontal line. 4. Click to place the dimension. 5. Make sure the left green arrow is selected. 6. Key in the value **7** and confirm with **Enter**.	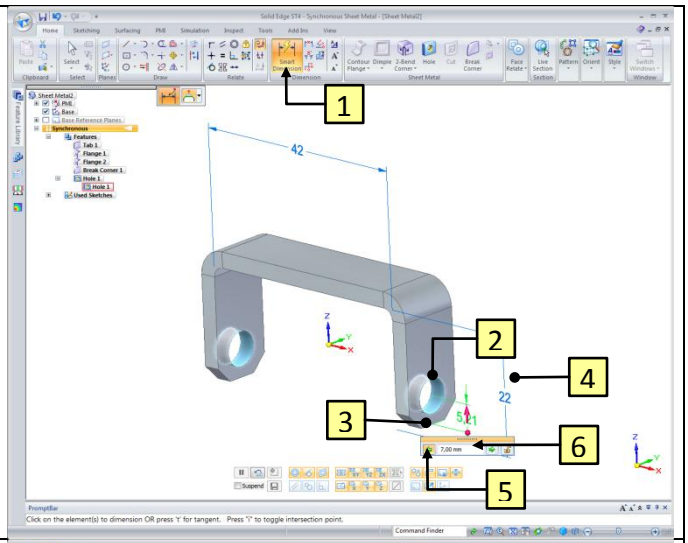
23 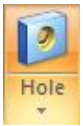 +	1. Click the **Hole** button. 2. Click the **Hole Options** button.	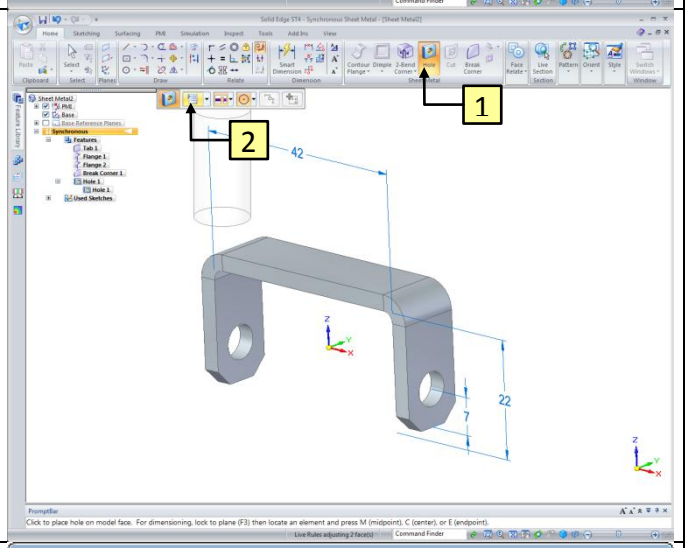
24	Fill in the Hole Options, as shown. 1. Type: **Threaded**; 2. Thread: **M5**; 3. Extent: **To hole extent**; 4. Extents: **Through Next**; 5. Click on the **OK** button.	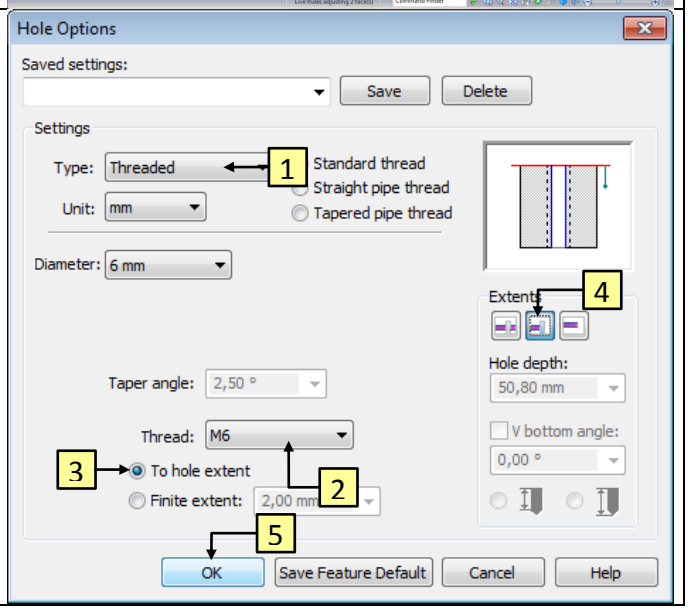

25	1. Point at the plane as shown, and click to place the Hole.	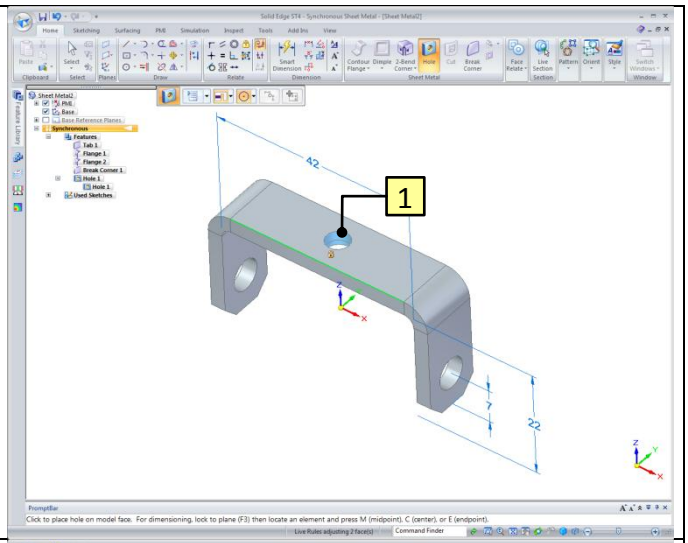
26	1. Click the **Select** button. 2. When you hover over the arrow it will turn red. Click on the arrow, as shown.	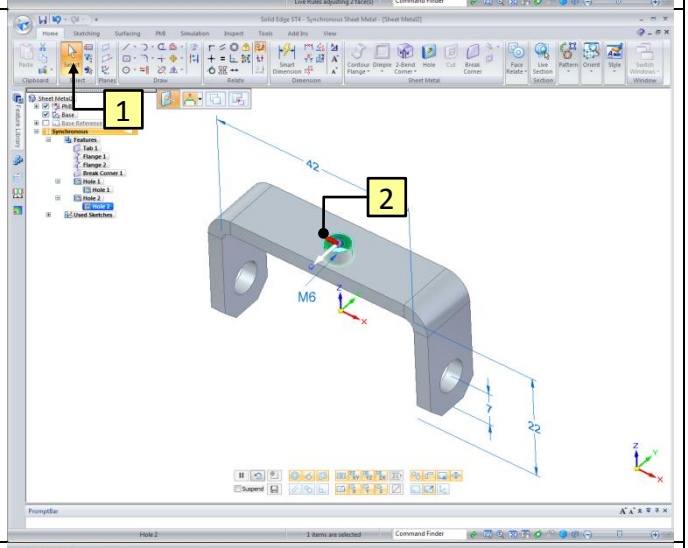
27	3. Point at the **Origin** and wait until the icon appears before clicking.	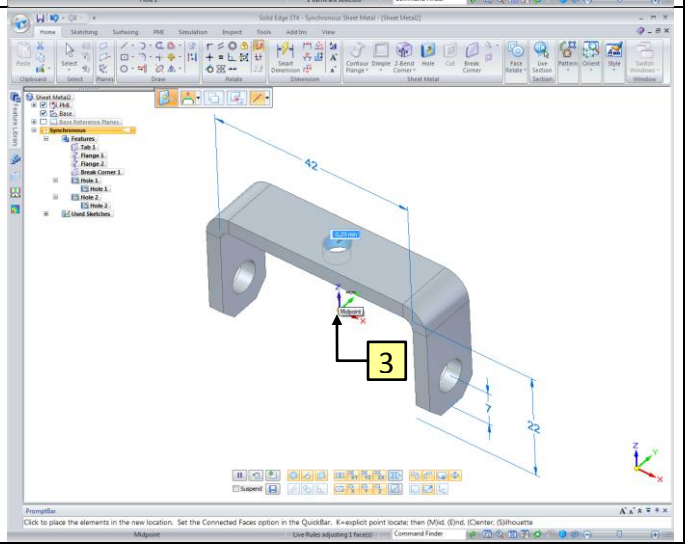

28	4. Click the blue point of the Steering Wheel. 5. Hold the cursor on the edge of the cylinder as shown, wait till the icon appears and click. The Hole will centre automatically.	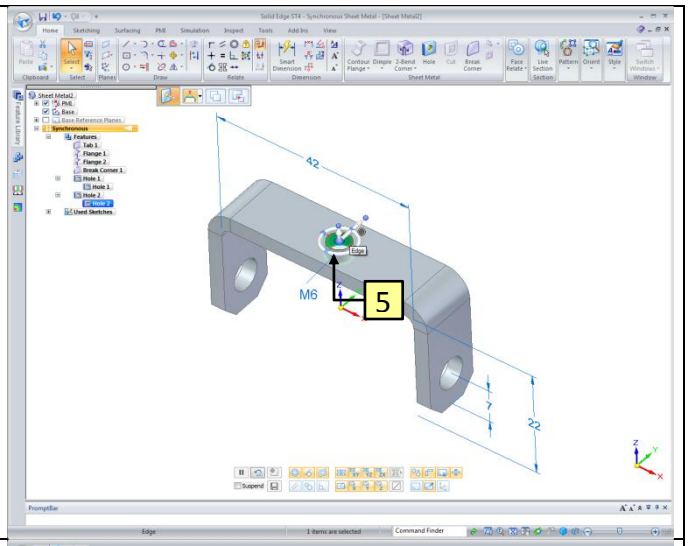
29	6. When you hover over the arrow it will turn red. Click on the arrow, as shown.	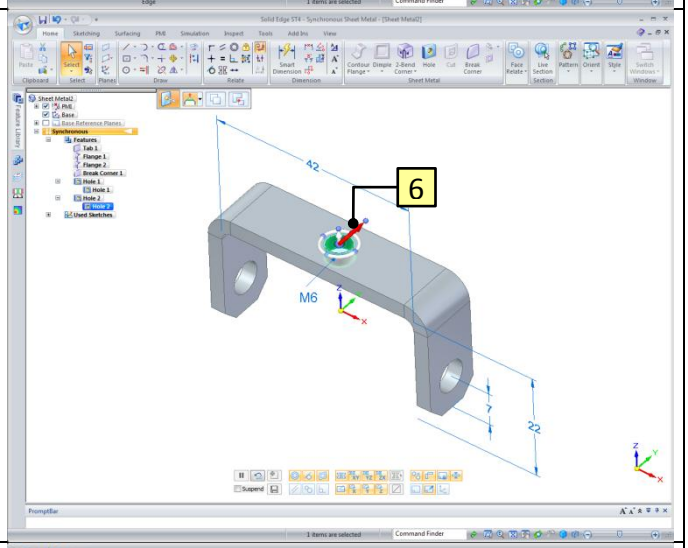
30	7. Point at the middle of the line. Wait until the icon appears before clicking.	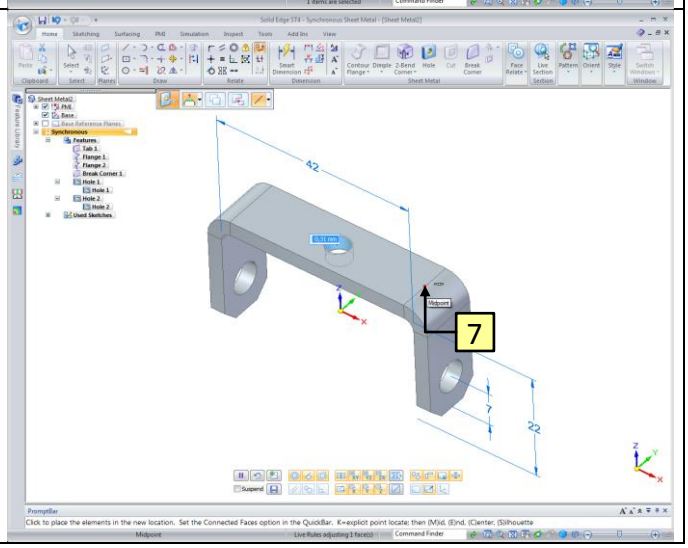

31

Now we set the material property.

1. Click the **Application Button**.
2. Click on **Properties**.
3. Click the **Material Table**.

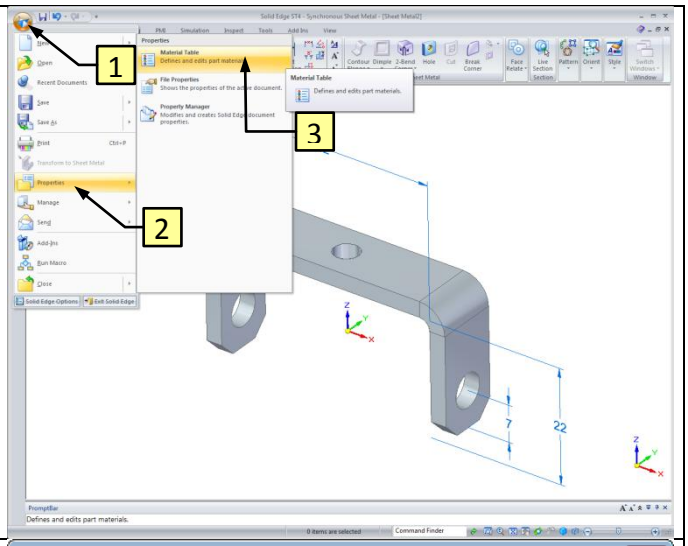

32

1. Choose the material **Steel**.
2. Click **Apply to Model** to set the material to the part.

Hint:

There are several properties which are connected to a material, like color en density. The density is necessary to determine the weight.

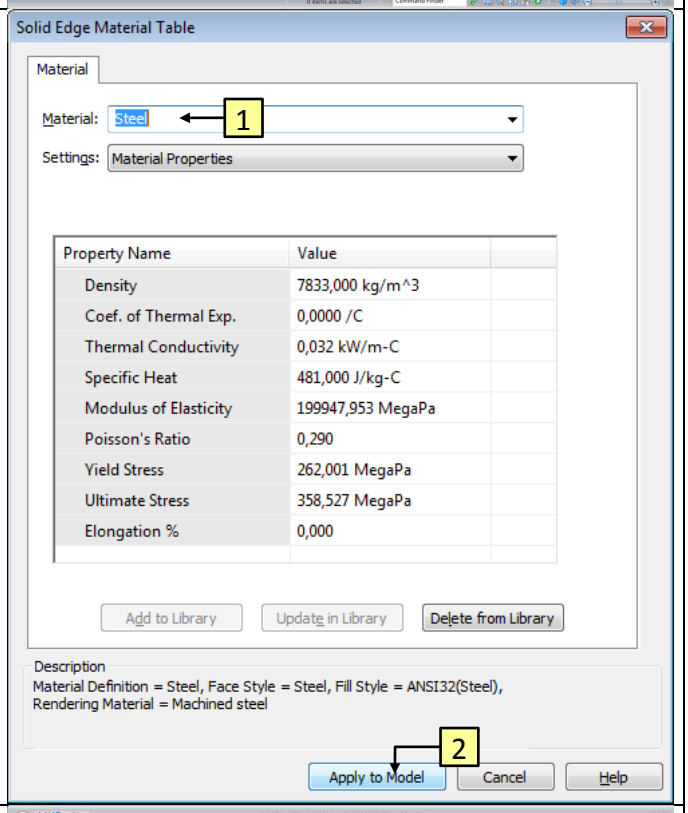

33

Now we can paint the part.

1. Click on **View → Part Painter**.

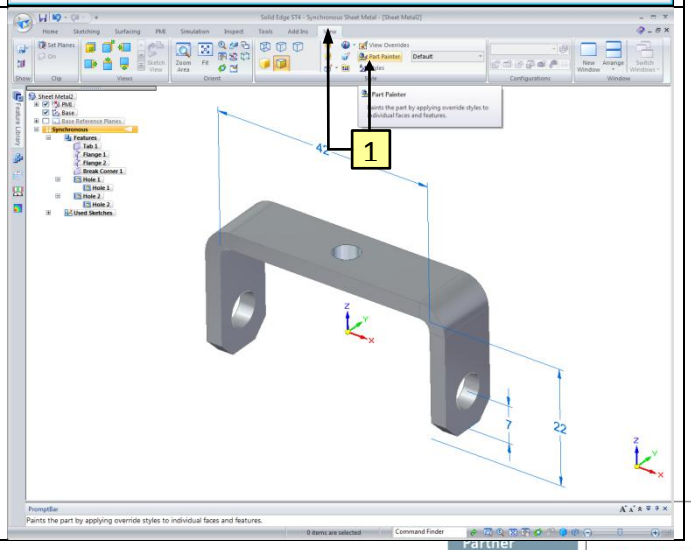

34	1. Select the style **Red**. 2. Click on the part. 3. Click the **Close** button. ***Hint:*** *If you don't get the follow message at step 35, please set the default settings again.*	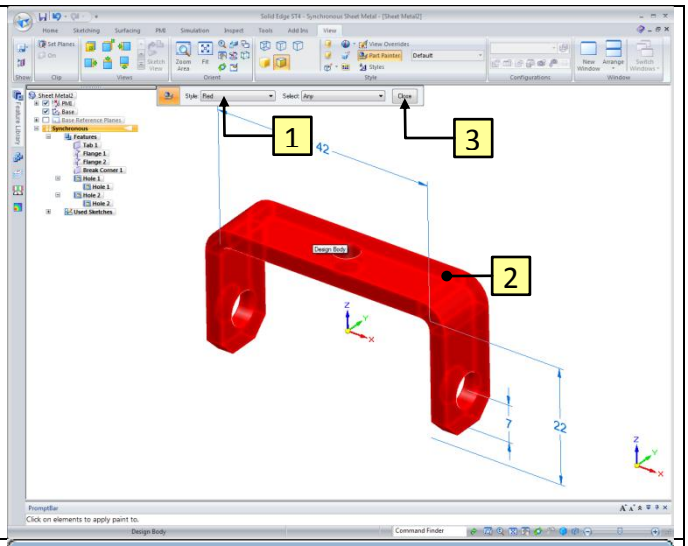
35	The part is ready. Now it must be saved. 1. First press **Ctrl** and **i** to turn the image to isometric view. 2. Click on the floppy icon. 3. Go to the **Summary** tab**.** 4. Type *Steering Bracket* at Title. 5. Go to the **Project** tab and fill in the following properties: Document Number*: 2001*. Revision Number*: A*. Project Name: *Roadroller*. 6. Click **OK** to close the screen. ***Hint:*** *All properties of the part are saved at the **File Properties**. These properties will be used by making a drawing or part list.*	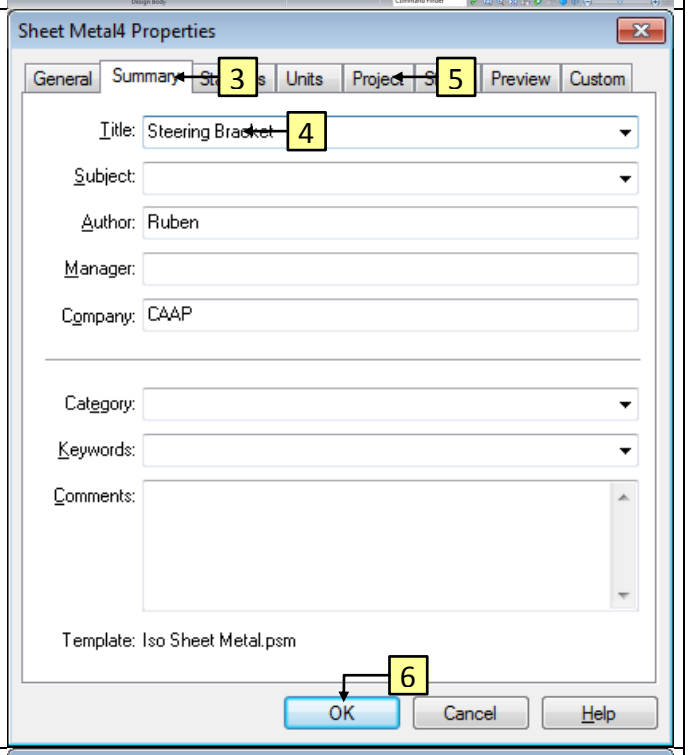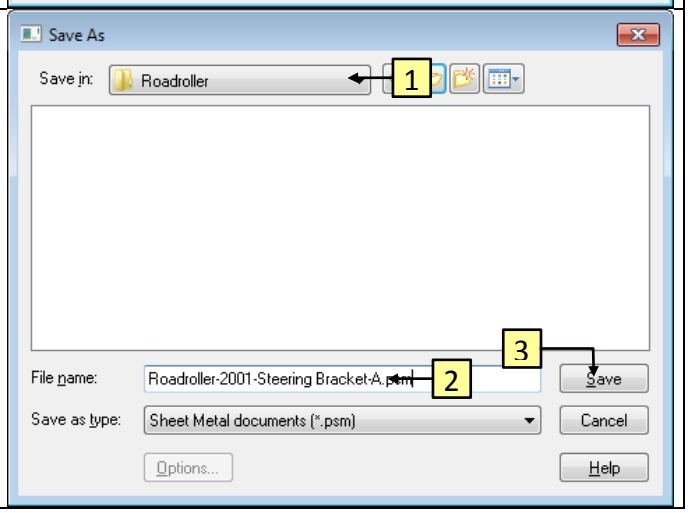
36	1. Browse to the folder *Roadroller*. 2. Save the document by name *Roadroller-2001-Steering Bracket-A.psm*. 3. Click the **Save** button. 4. Close the file. ***Hint:*** *Save all files of one project in the same folder.*