SOLID EDGE
VELOCITY SERIES

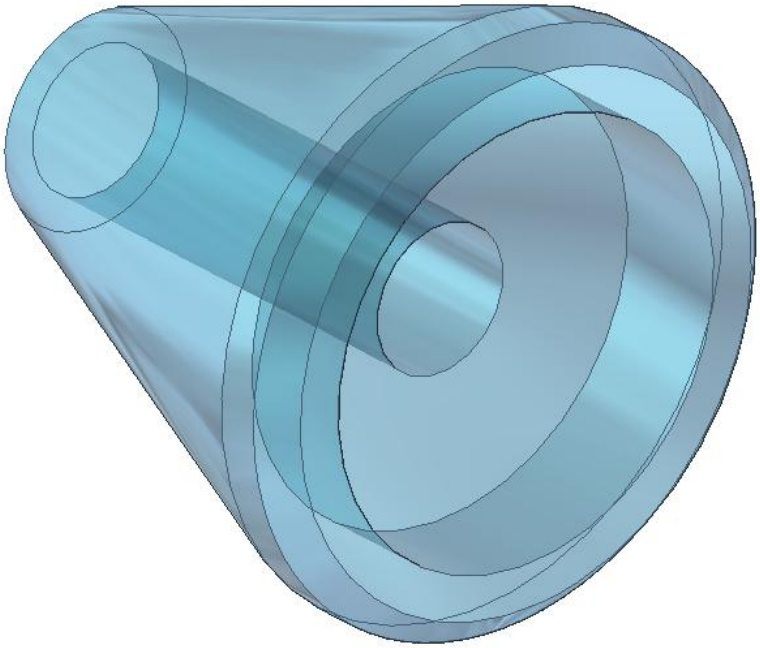

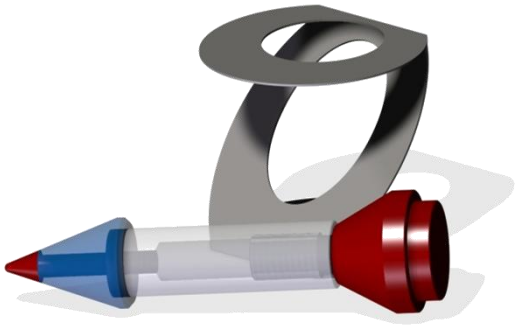

Tutorial: ***Head***

Project: ***Rocket (Synchronous)***

cad / cam / pdm / cae | CAAP®

Solution Partner PLM | SIEMENS

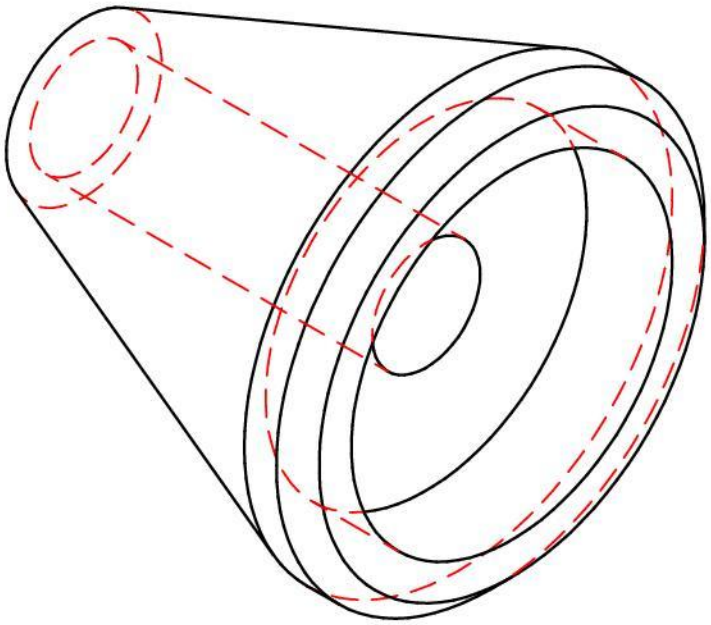

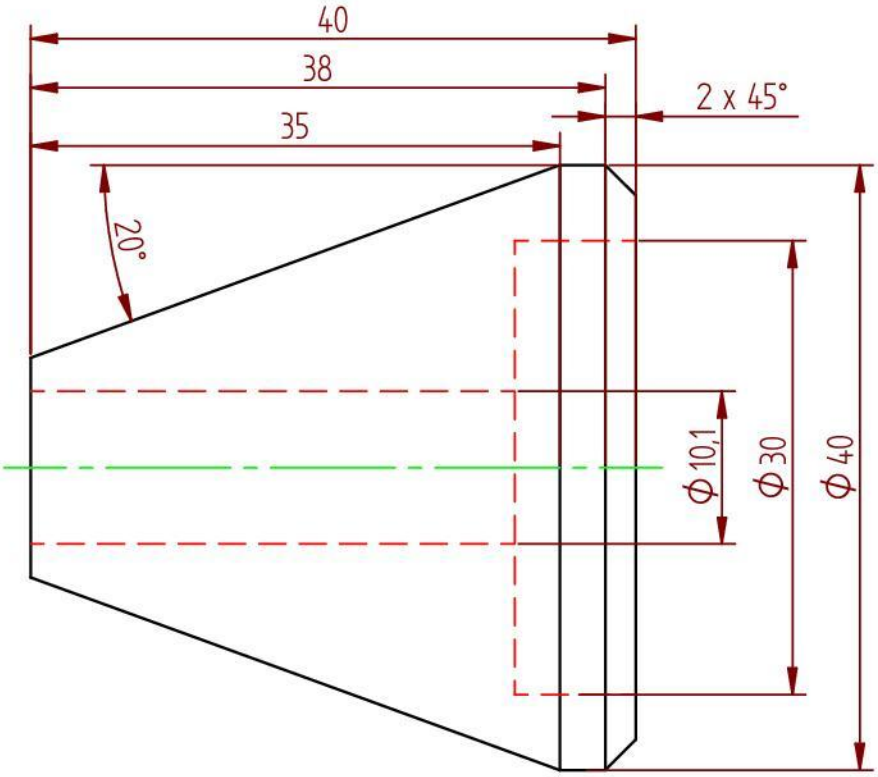

AMERICAN PROJECTION	SCALE : 2:1	AUTHOR : Ruben	CAAP Hamersveldseweg 65 3833 GL Leusden +31(0)33-4573322 www.caap.nl
	DIMENSION UNITS : MM	CLASS (DEPARTMENT) : -	
	DATE : 29-10-2011	CHECKED BY : -	

MATERIAL : ABS Plastic, high impact	TITEL :	NUMBER :	REV:	SIZE:
PROJECT: Rocket	Head	1002	A	A4

1 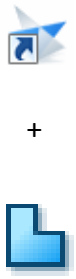	1. Start **Solid Edge.** 2. Click on **<u>ISO Part.</u>** 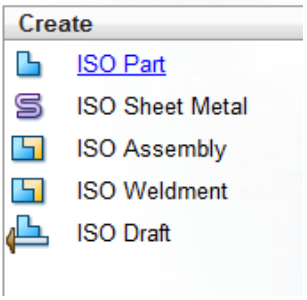	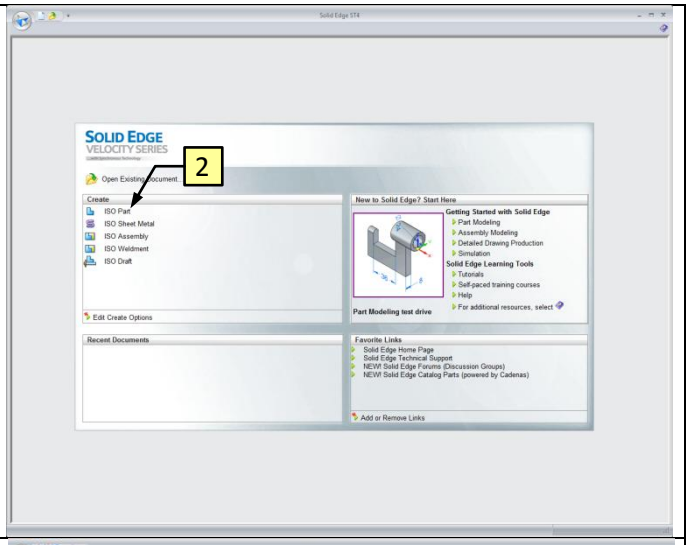
2	1. Click the **Line** button. 2. Draw the profile, as shown.	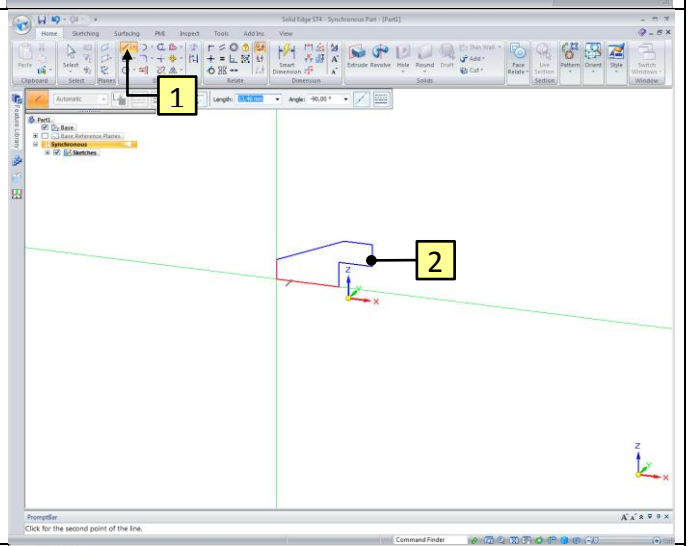
3	1. Click the **Symmetric Diameter** button**.** 2. Click on the X-axis. 3. Click on the horizontal line, as shown. 4. Click to place the dimension. 5. Key in the value **10,1** and confirm with **Enter**.	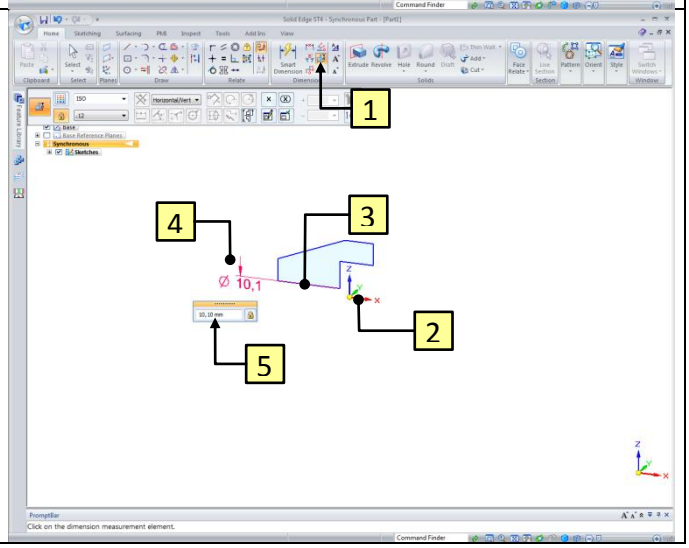

4	6. Click on the right horizontal line. 7. Click to place the dimension. 8. Key in the value **30** and confirm with **Enter**.	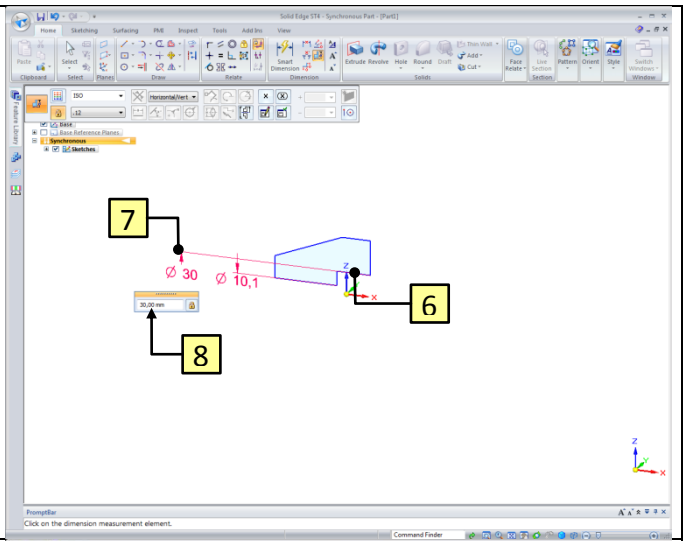
5	1. Click the **Angle Between** button. 2. Click on the horizontal line, as shown. 3. Click on the slanted line. 4. Click to place the dimension. 5. Key in the value **20** and confirm with **Enter**.	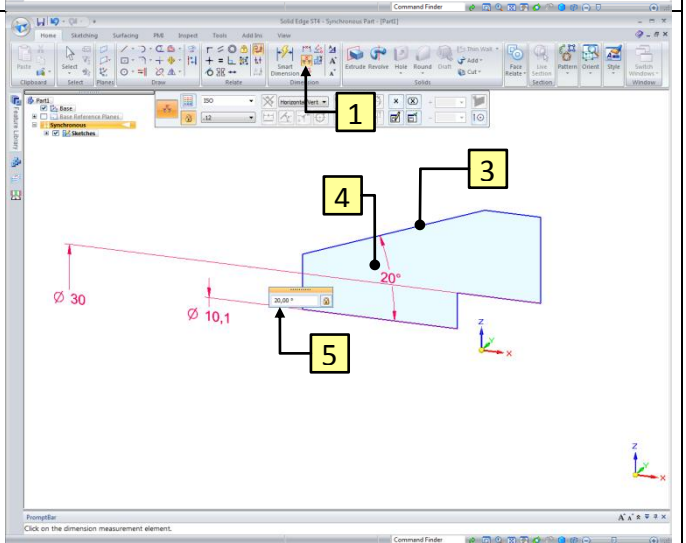
6	1. Click the **Smart Dimension** button. 2. Click on the horizontal line. 3. Click to place the dimension. 4. Key in the value **8** and confirm with **Enter**.	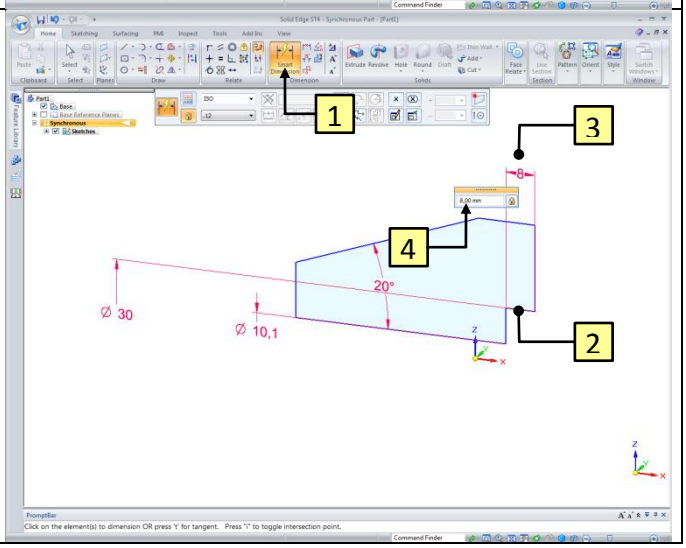

7	If the **Smart Dimension** is still active. 5. Click on the horizontal line, as shown. 6. Click to place the dimension. 7. Key in the value **5** and confirm with **Enter**.	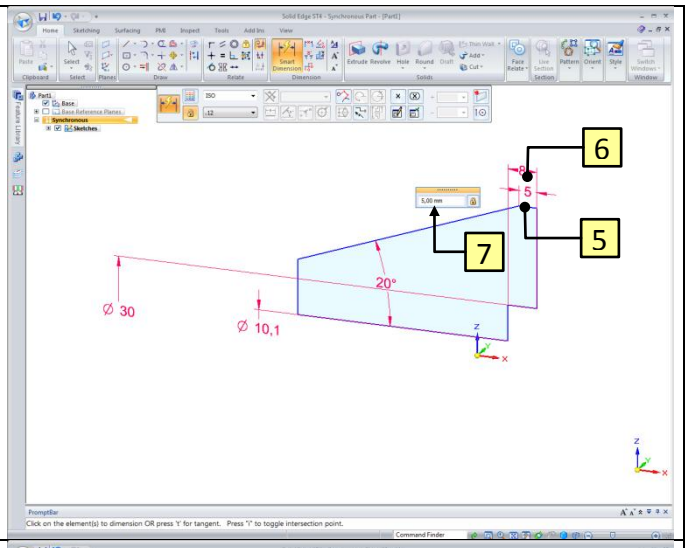
8	1. Click on the left vertical line. 2. Click on the right vertical line, as shown. 3. Click to place the dimension. 4. Key in the value **40** and confirm with **Enter**.	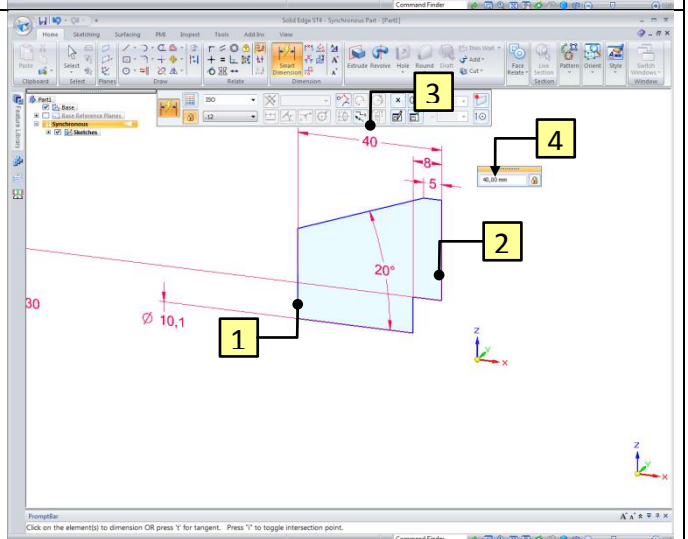
9	1. Click the **Symmetric Diameter** button. 2. Click on the X-axis. 3. Click on the horizontal line. 4. Click to place the dimension. 5. Key in the value **40** and confirm with **Enter**.	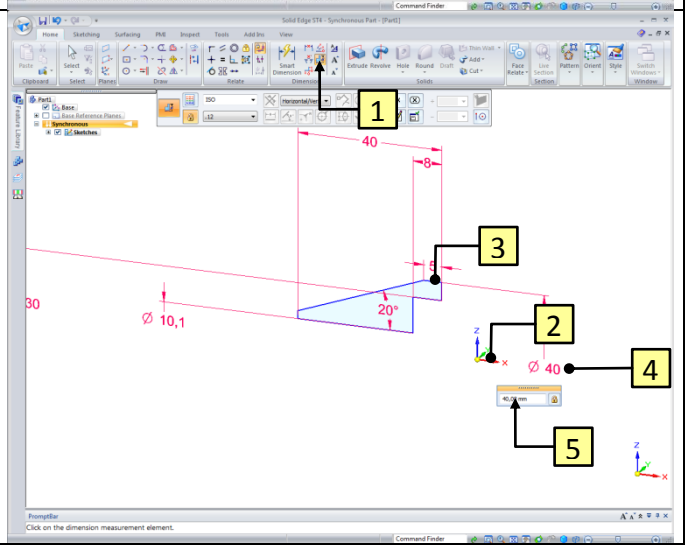

10	1. Click the **Connect** button. 2. Point at the middle point of the horizontal line and wait until the icon appears before clicking. 3. Point at the X-axis and wait until the icon appears before clicking.	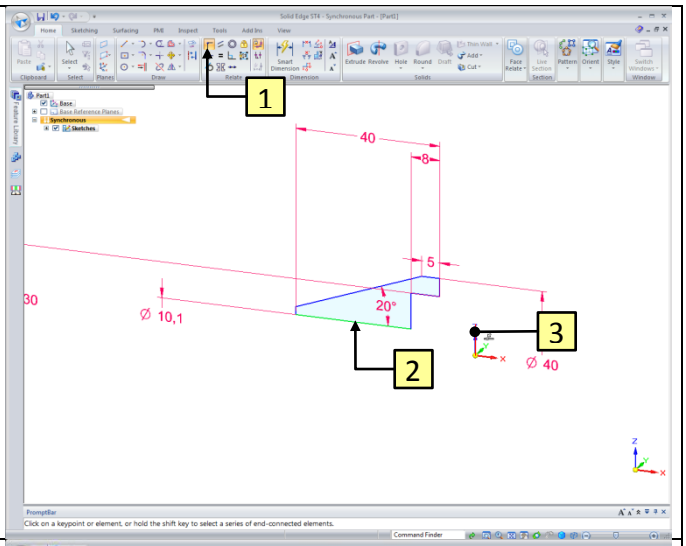
11	1. Click the **Select** button. 2. When you hover over the Region, it will turn red. Click on the Region, as shown.	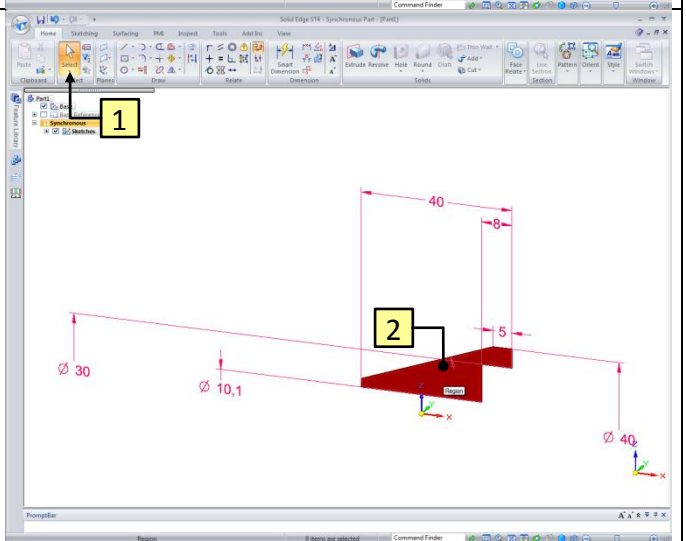
12	3. Click the **Revolve** button.	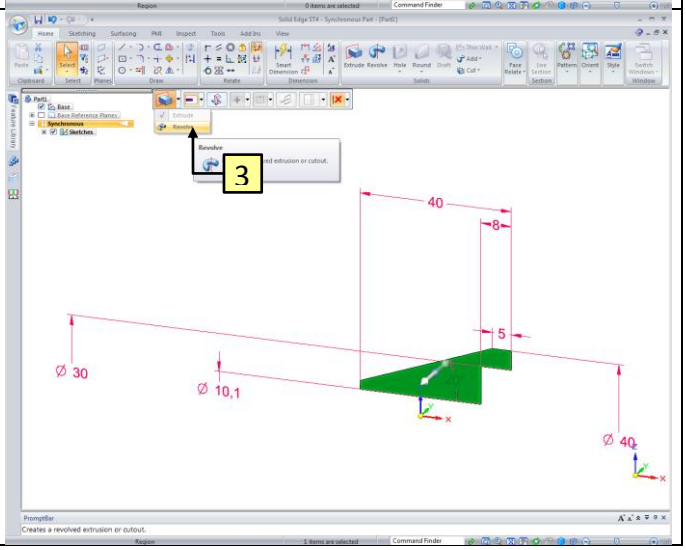

13	4. Click on the blue doth of the Steering Wheel and click on the X-axis to place it. 5. When you hover over the **Torus** of the Steering Wheel, it will turn red. Click on the **Torus**, as shown.	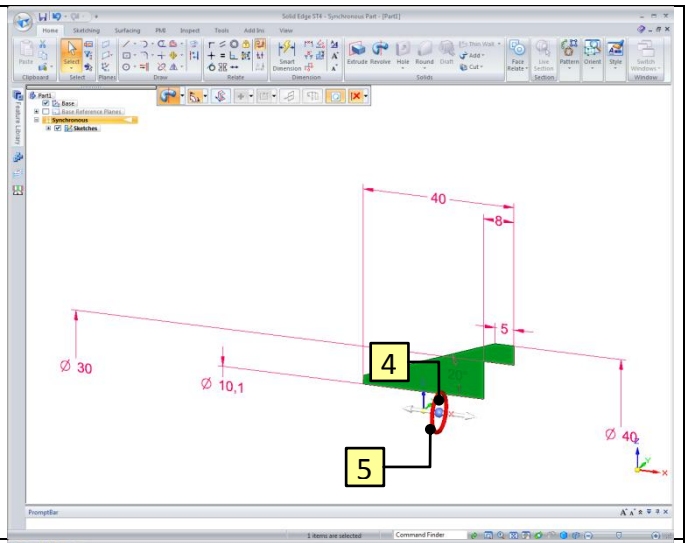
14	6. Click the **360** button.	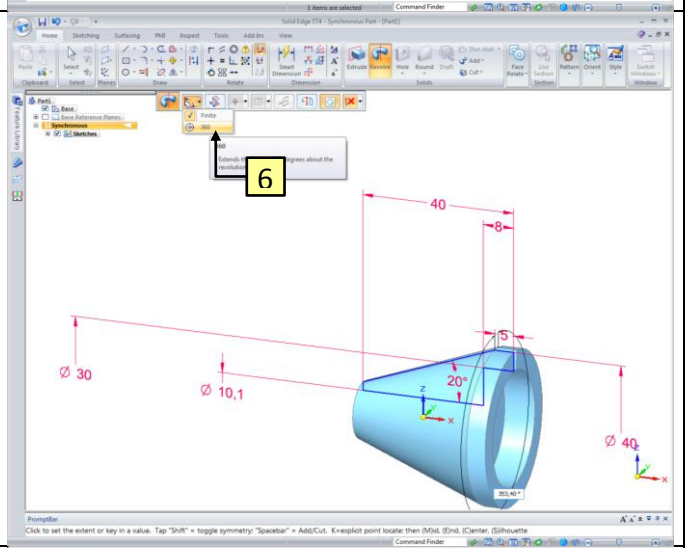
15	1. Click the **Chamfer by Equal Setbacks** button. 2. Click on the edge, as shown. 1. Key in a value for the chamfer (in this case **2**) and confirm with **Enter**.	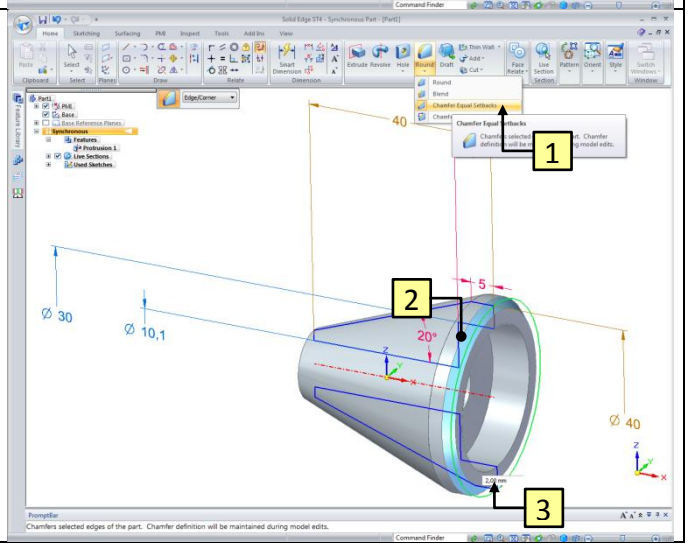

16	Now we set the material property. 1. Click the **Application Button**. 2. Click on **Properties**. 3. Click the **Material Table** button.	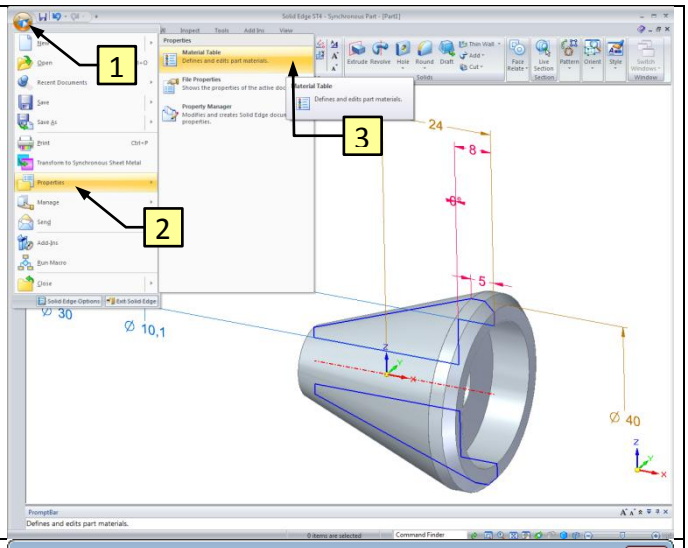
17	1. Choose the material **ABS, high impact**. 2. Click **Apply to Model** to set the material to the part. ***Hint:*** *There are several properties which are connected to a material, like color and density. The density is necessary to determine the weight.*	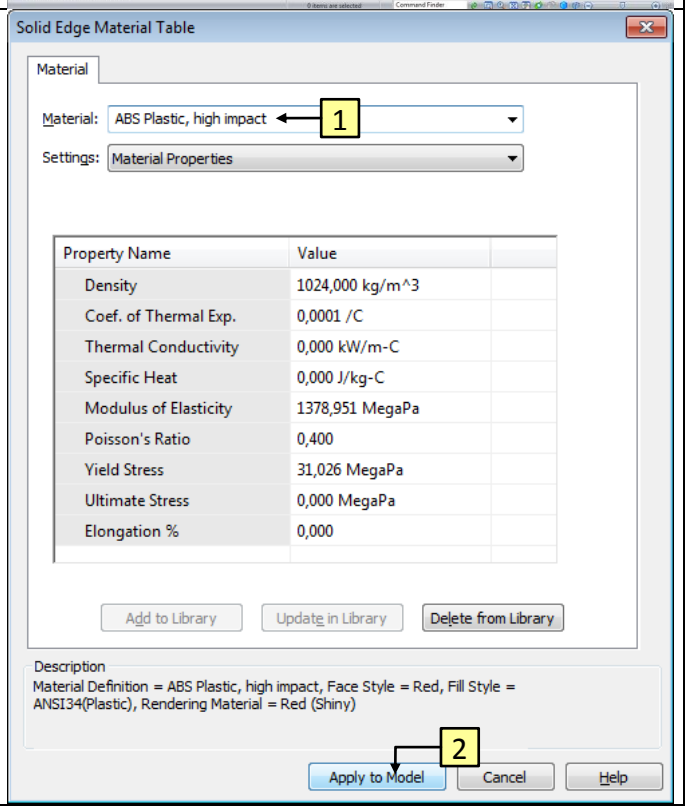

18	Now we can paint the part. 1. Click on **View → Part Painter**.	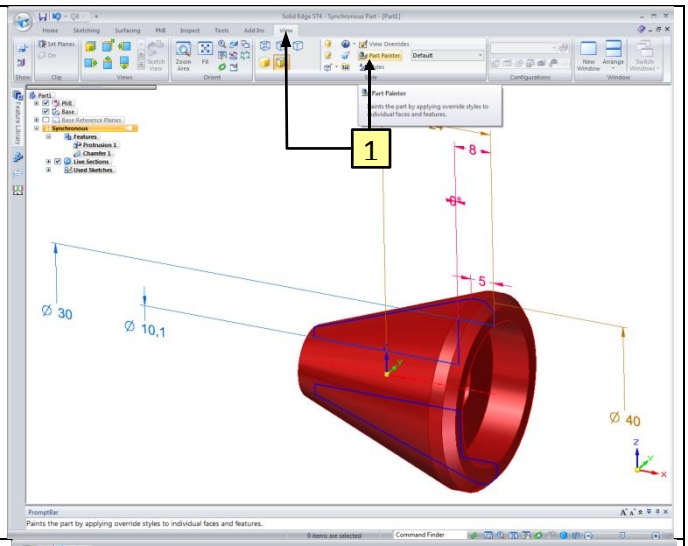
19	1. Select the style **Blue (clear)**. 2. Click on the part. 3. Click the **Close** button. ***Hint:*** *If you don't get the follow message at step 20, please set the default settings again.*	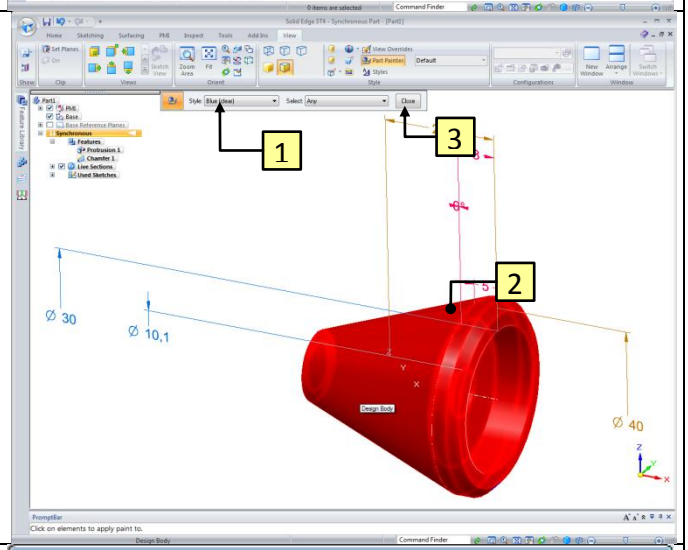
20	The part is ready. Now it must be saved. 1. First press **Ctrl + i** to turn the image to isometric view. 2. Click on the floppy icon. 3. Go to the **Summary** tab**.** 4. Fill in *Head* at Title. 5. Go to the **Project** tab and fill in the following properties: Document Number*: 1002*. Revision Number*: A*. Project Name: *Rocket*. 6. Click **OK** to close the screen. ***Hint:*** *All properties of the part are saved at the **File Properties**. These properties will used to fill in a part list.*	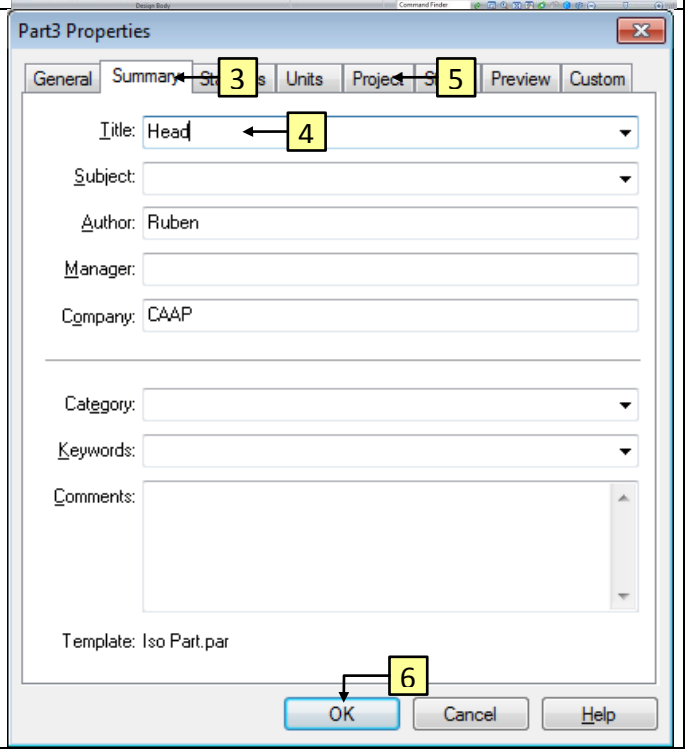
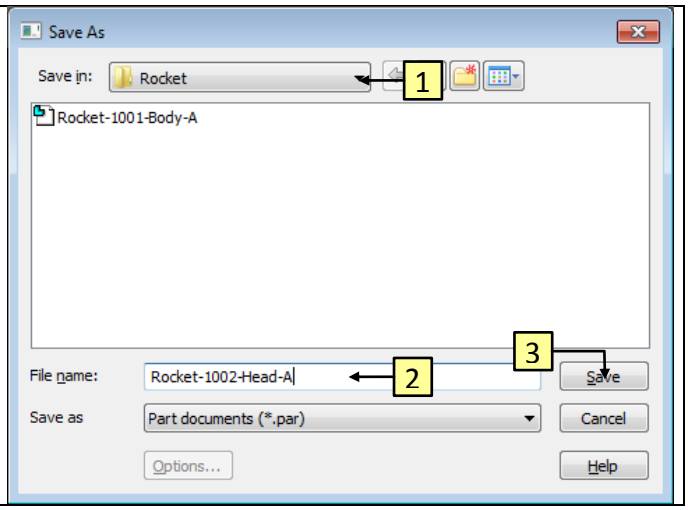
21	1. Browse to the folder *Rocket*. 2. Save the document by name *Rocket-1002-Head-A.par*. 3. Click the **Save** button. 4. Close the file. ***Hint:*** *Save all files of one project in the same folder.*