SOLID EDGE
VELOCITY SERIES

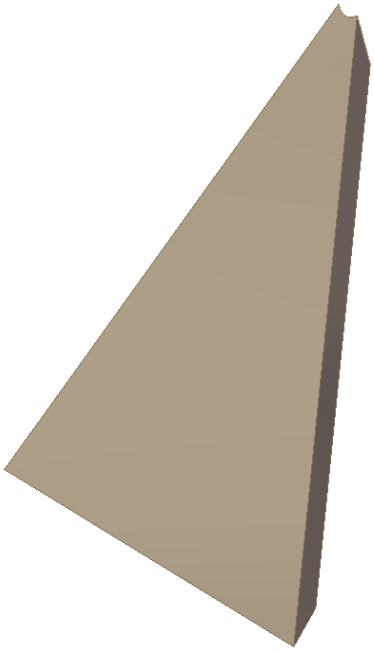

Tutorial: ***Roof***

Project: ***Bird Feeder (Synchronous)***

cad / cam / pdm / cae | CAAP®

Solution Partner PLM | SIEMENS

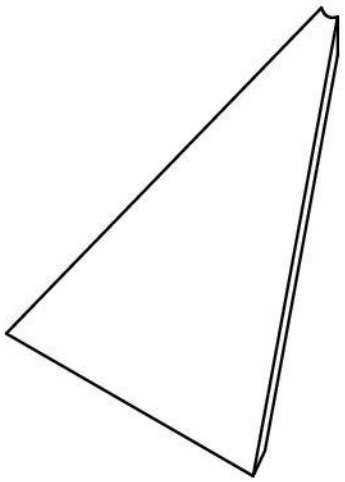

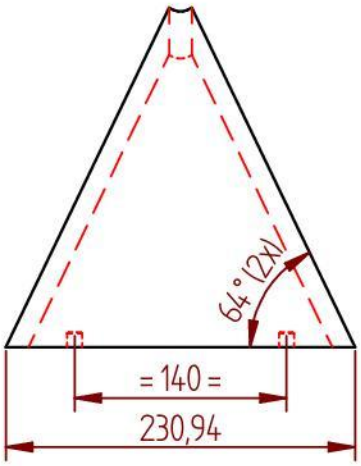

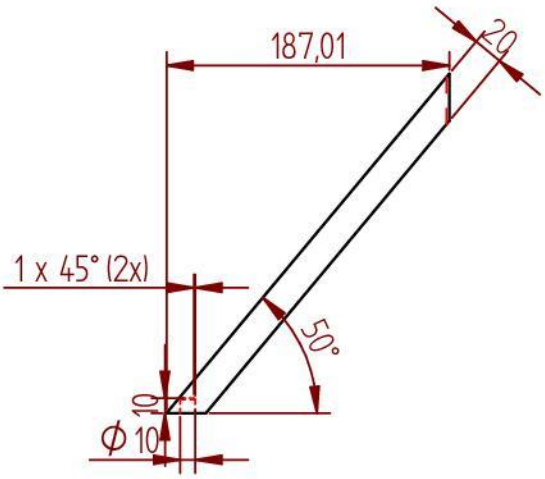

AMERICAN PROJECTION	SCALE : 1:5	AUTHOR : Ruben	Hamersveldseweg 65 3833 GL Leusden +31(0)33-4573322 www.caap.nl
	DIMENSION UNTS : MM	CLASS (DEPARTMENT) : -	
	DATE : 12-11-2011	CHECKED BY : -	

MATERIAL : Wood, Oak	BENAMING :	NUMBER :	REV:	SIZE:
PROJECT: Bird Feeder	Roof	1011	A	A4

1	1. Start **Solid Edge.** 2. Click on **ISO Part.** 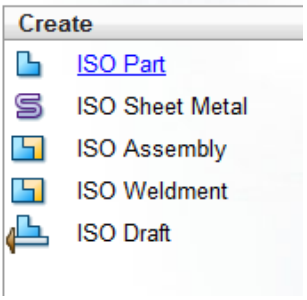	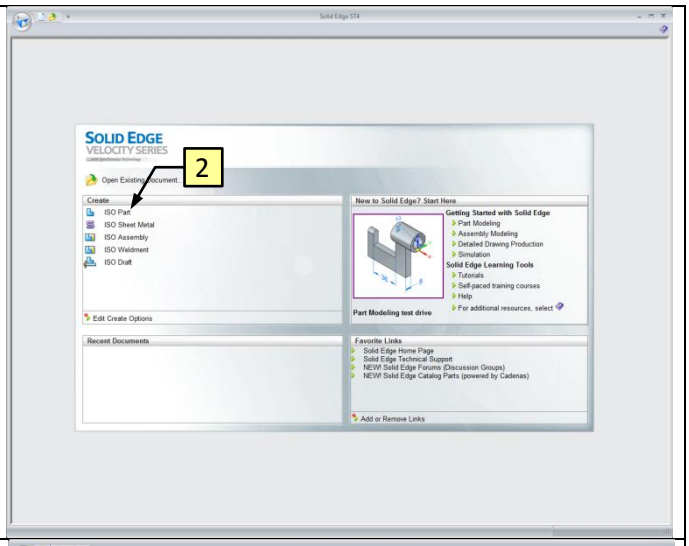
2	1. Click the **Polygon by Center** button. 2. Point at the **Origin** and wait until the icon appears before clicking.	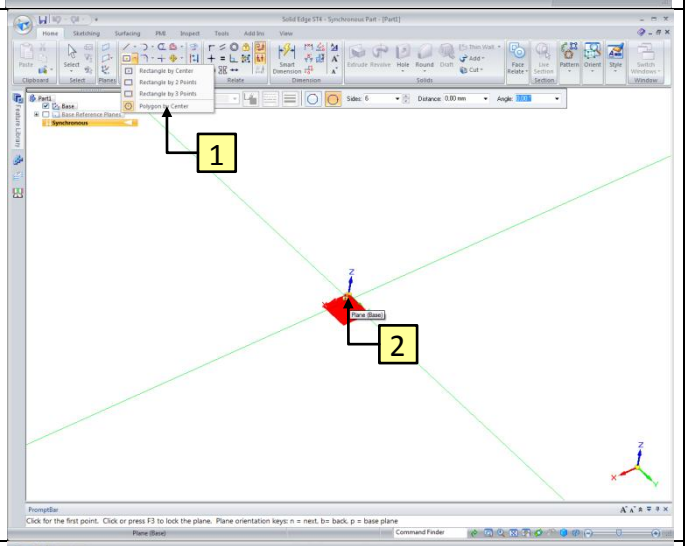
3	3. Point at the Y-axis, as shown and wait until the dotted line and icon appears before clicking.	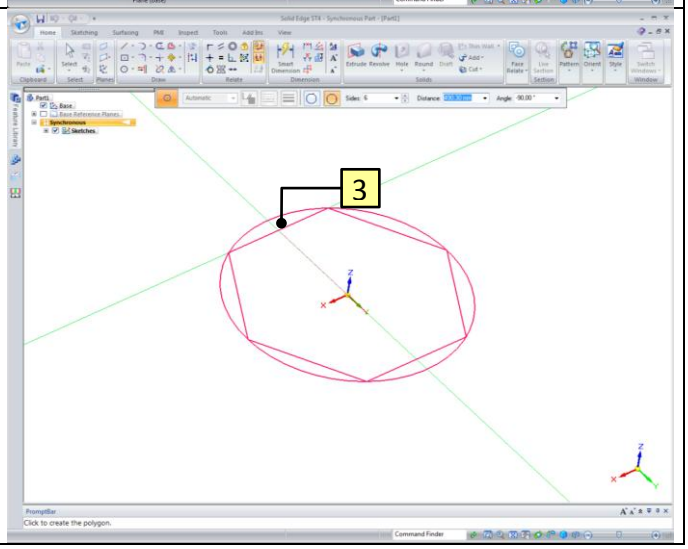

4	1. Click the **Horizontal/Vertical** button. 2. Click on the horizontal line, as shown.	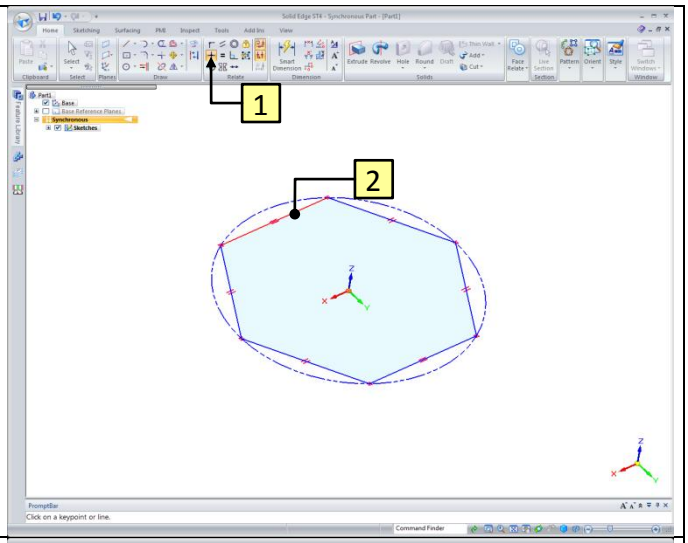
5	1. Click the **Smart Dimension** button. 2. Click on the horizontal line. 3. Click on the other horizontal line, as shown. 4. Click to place the dimension. 5. Key in the value **400** and confirm with **Enter**.	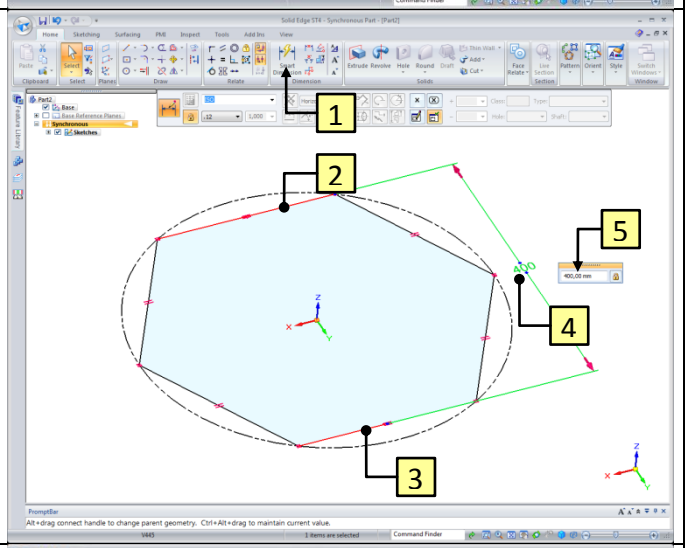
6	1. Click the **Line** button. 2. Draw the profile, as shown. Wait until the icon of the **Origin** appears before place the first line.	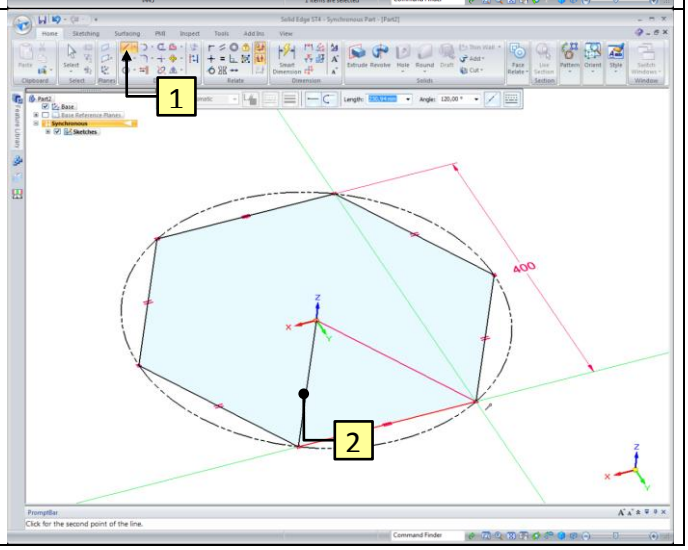

7	1. Click the **Select** button. 2. When you hover over the Region, it will turn red. Click on the Region, as shown.	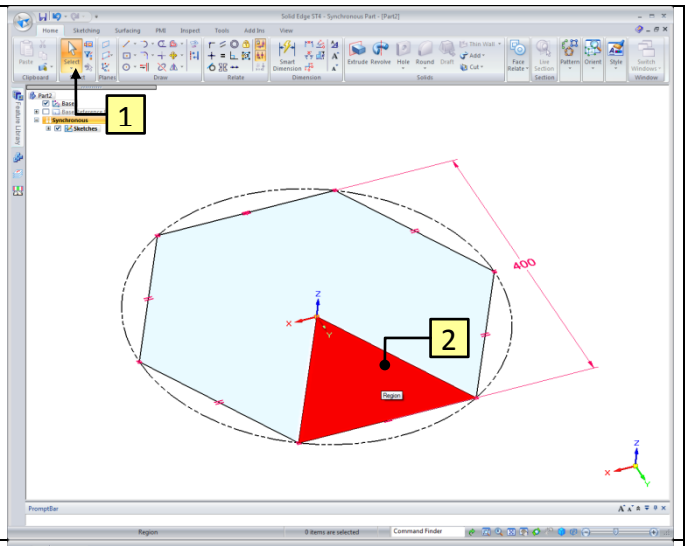
8	3. When you hover over the arrow, it will turn red. Click on the arrow, as shown. 4. Make sure the **Extrude – Symmetric** is turned off.	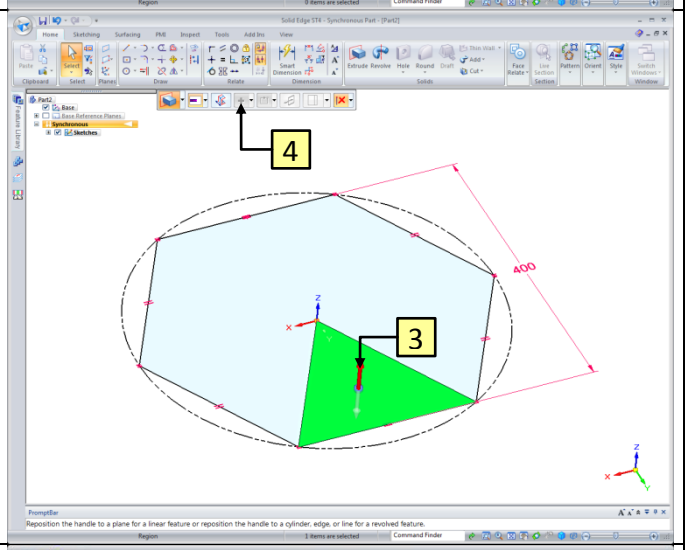
9	5. Type **250** and confirm with **Enter**.	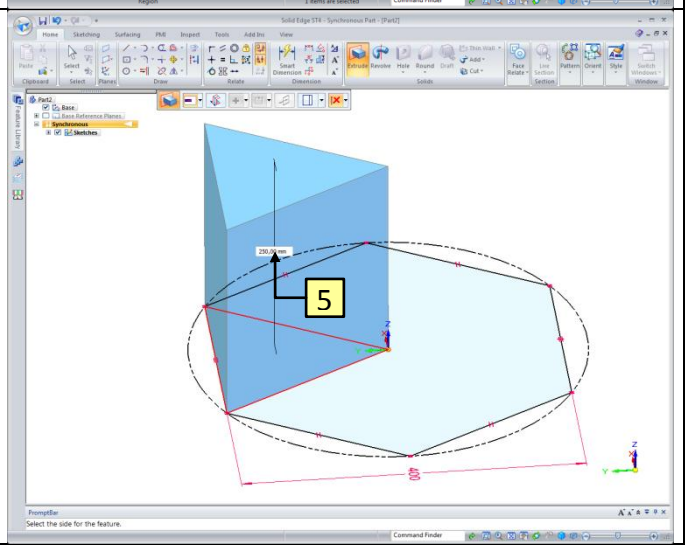

10	1. Click the **Line** button. 2. Click on the Right (yz) plane in the PathFinder, as shown.	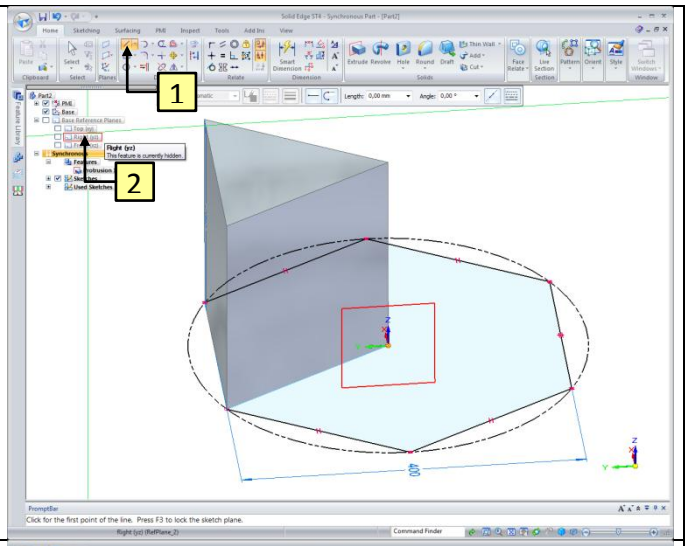
11	3. Point at the endpoint of the right vertical line and wait until the icon appears before clicking. 4. Point the cursor on the middle point of the horizontal line and make sure the red virtual line appears, as shown. 5. Point at the endpoint of the red vertical line and wait until the icon appears before clicking.	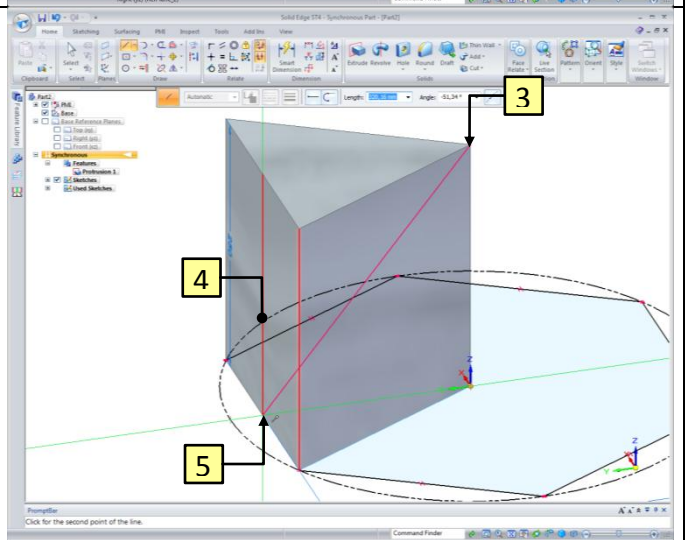
12	6. Finish the profile to make a Region, as shown.	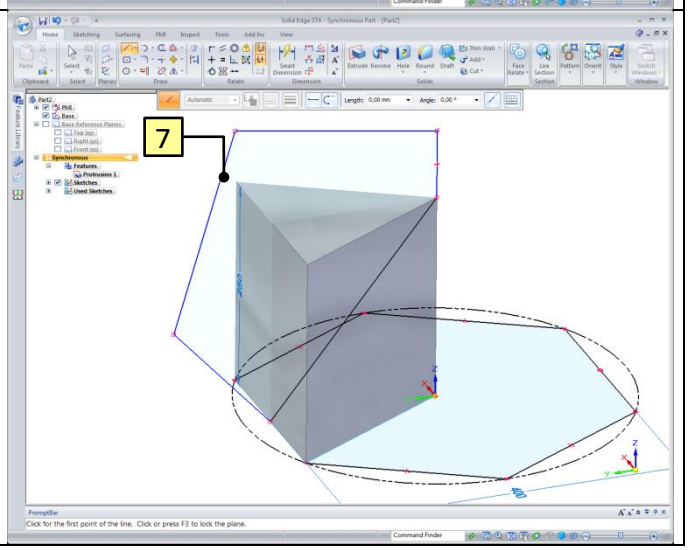

13	1. Click the **Select** button. 2. When you hover over the Region, it will turn red. Click on the Region, as shown.	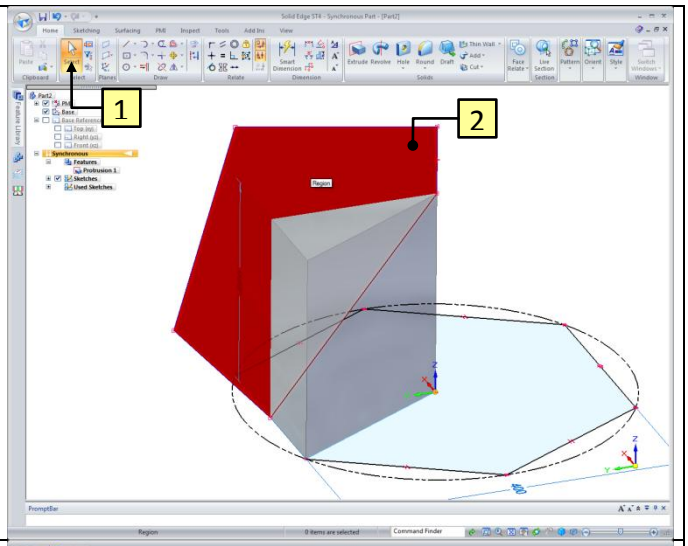
14	3. When you hover over the arrow, it will turn red. Click on the arrow, as shown. 4. Click the **Extrude – Symmetric** button.	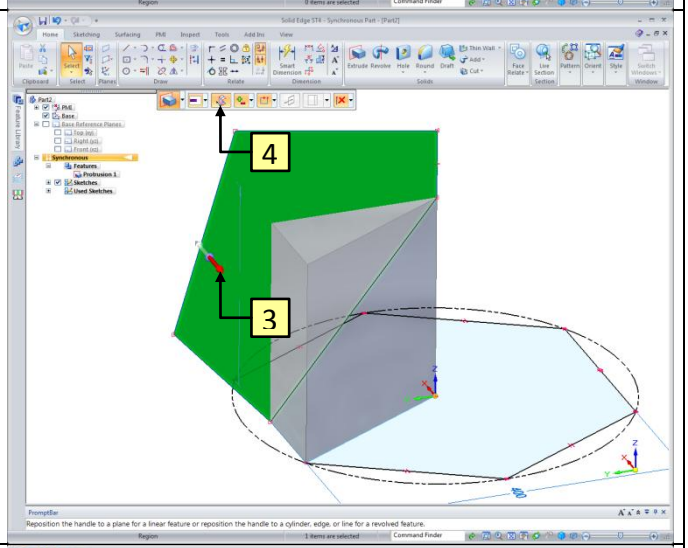
15	1. Click on the **Remove** option. 2. Make sure the Cut is Through the part and click.	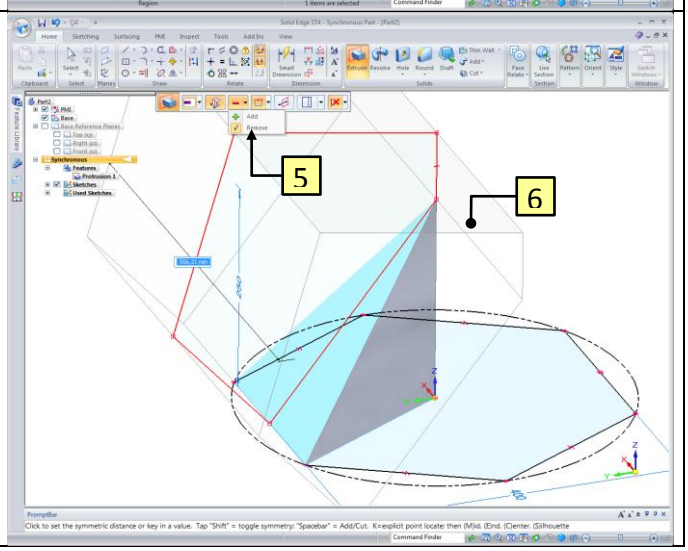

16	1. Click the **Line** button. 2. Click on the Right (yz) plane in the PathFinder, as shown.	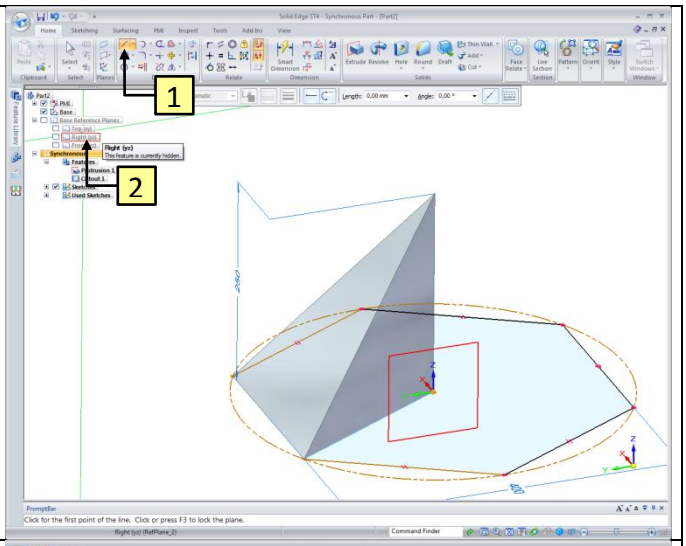
17	3. Point the cursor on the right vertical line and wait until the icon appears before clicking. 4. Point the cursor on the horizontal line and wait until the icon appears before clicking.	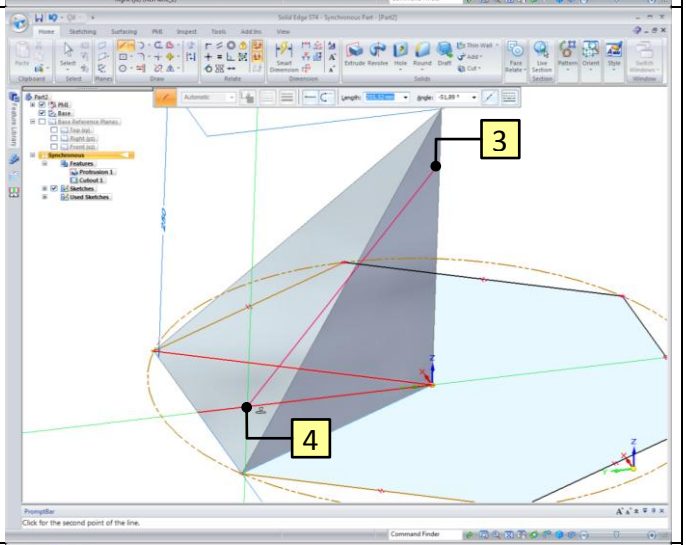
18	1. Click the **parallel** button. 2. Click on the slanted line. 3. Click on the other slanted line, as shown.	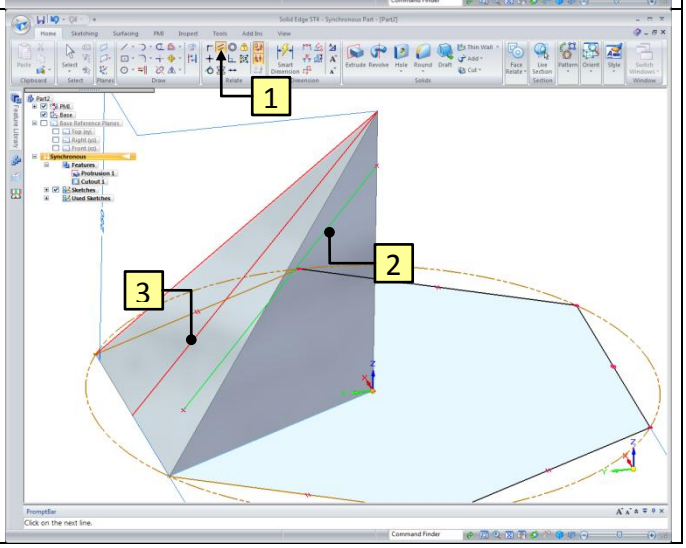

19	1. Click the **Distance Between** button. 2. Click on the slanted line. 3. Click on the other slanted line, as shown. 4. Click to place the dimension. 5. Key in the value **20** and confirm with **Enter**.	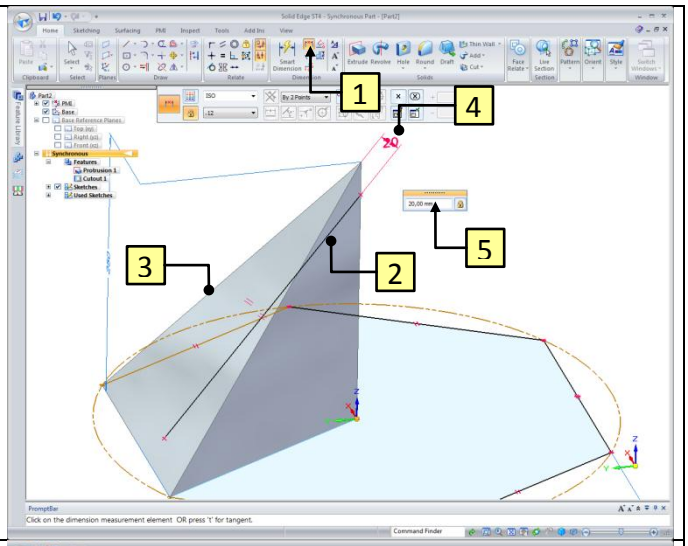
20	1. Click the **Line** button. 2. Finish the profile to make a Region, as shown.	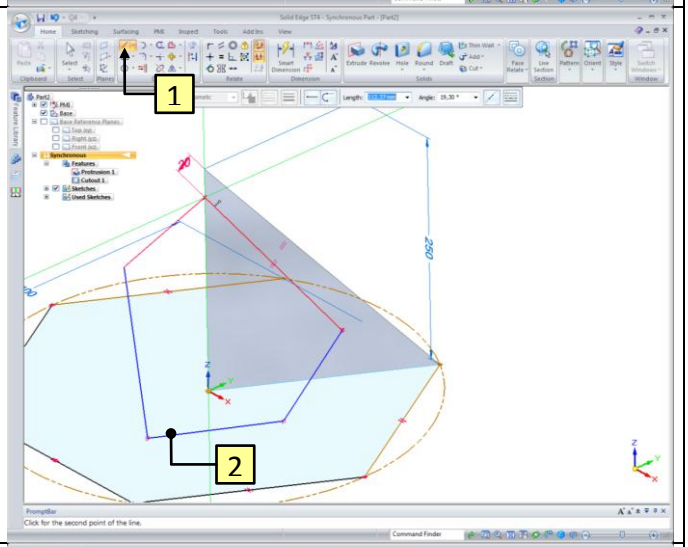
21	1. Click the **Select** button. 2. When you hover over the Region, it will turn red. Click on the Region, as shown.	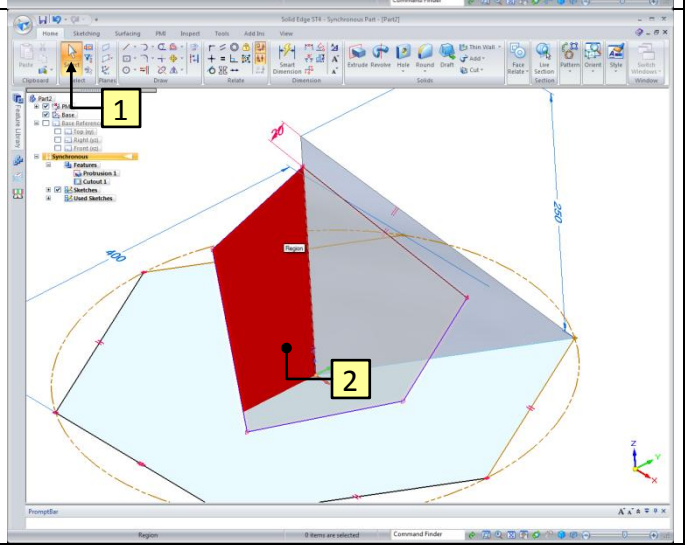

22	3. When you hover over the arrow, it will turn red. Click on the arrow, as shown. 4. Click the **Extrude – Symmetric** button.	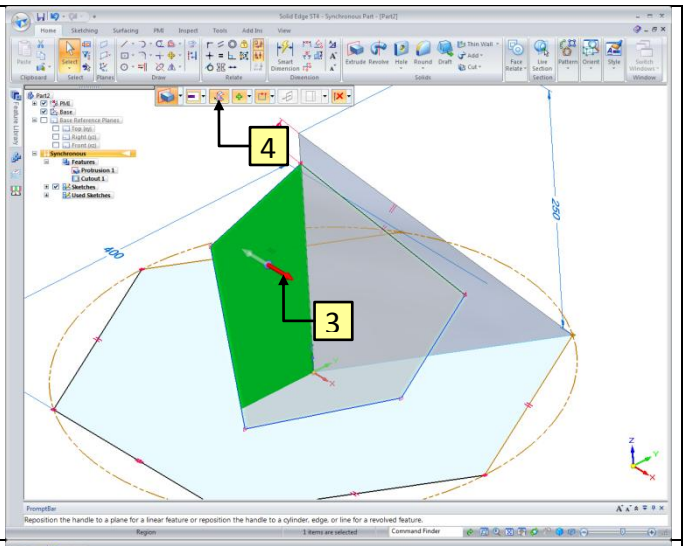
23	1. Click on the **Remove** option. 2. Make sure the Cut is through the part and click.	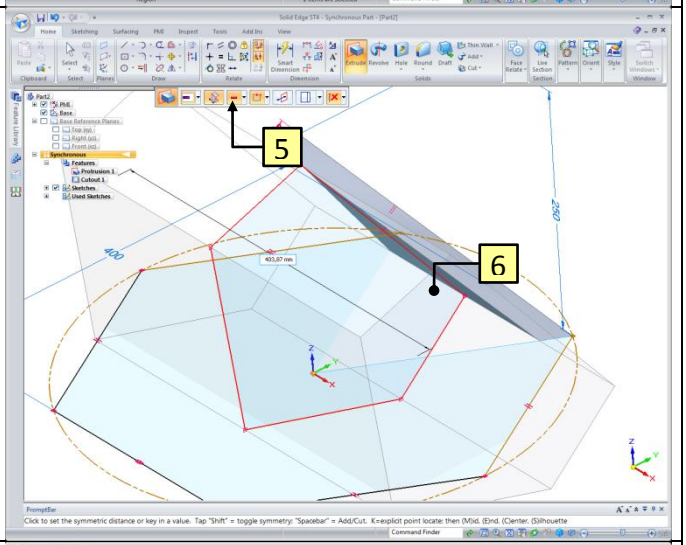
24	1. Click the **Circle by Center Point** button. 2. Point at the **Origin** and wait until the icon appears before clicking.	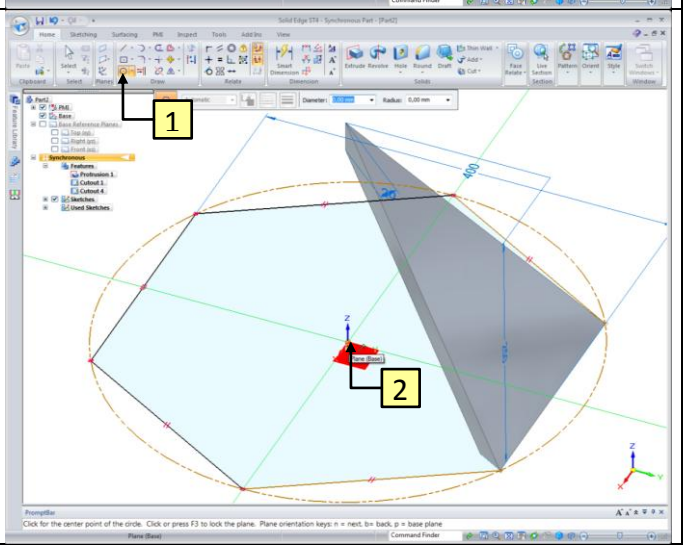

25	3. Click to place the Circle by Center Point.	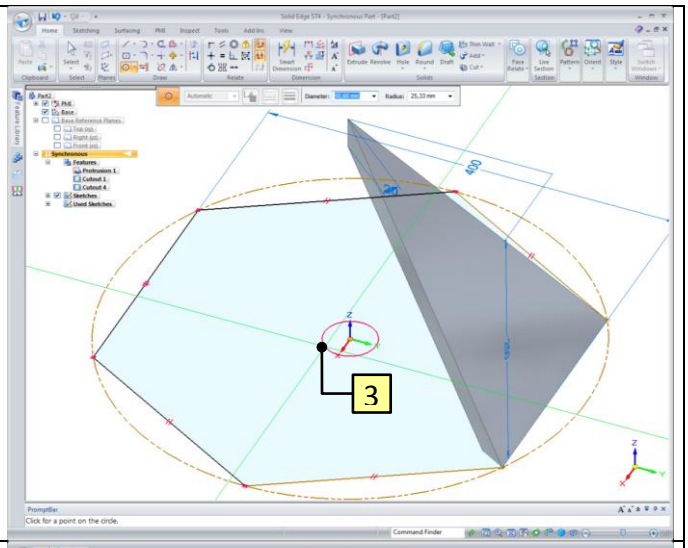
26	1. Click the **Smart Dimension** button. 2. Click on the Circle. 3. Click to place the dimension. 4. Key in the value **30** and confirm with **Enter**.	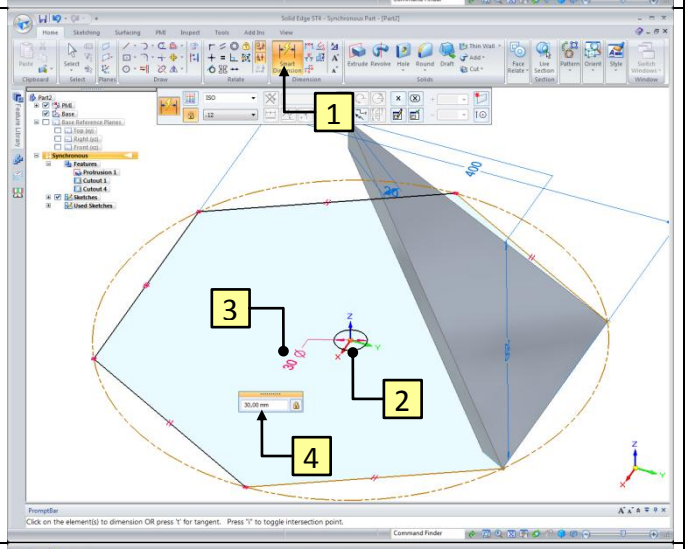
27	1. Click the **Select** button. 2. When you hover over the Region, it will turn red. Click on the Region, as shown.	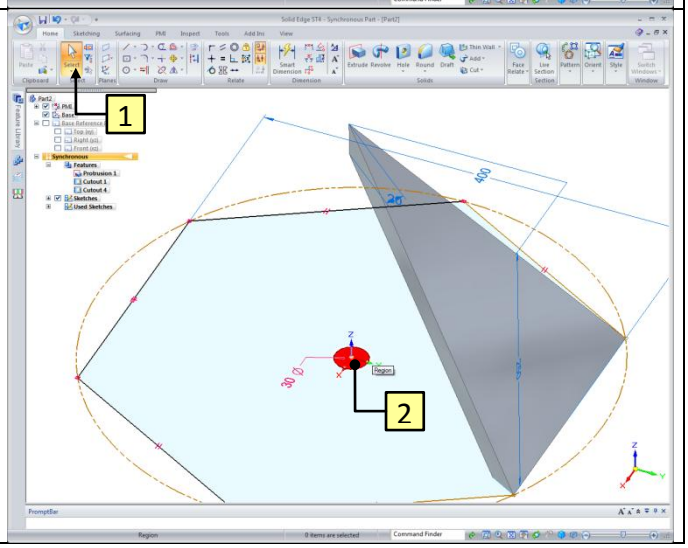

28	3. When you hover over the arrow, it will turn red. Click on the arrow, as shown. 4. Click the **Extrude – Symmetric** button.	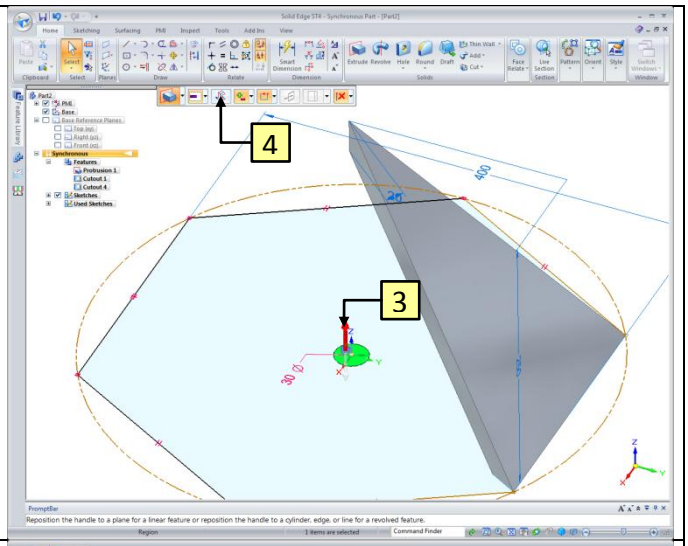
29	5. Click on the **Remove** option. 6. Make sure the Cut is through the part and click.	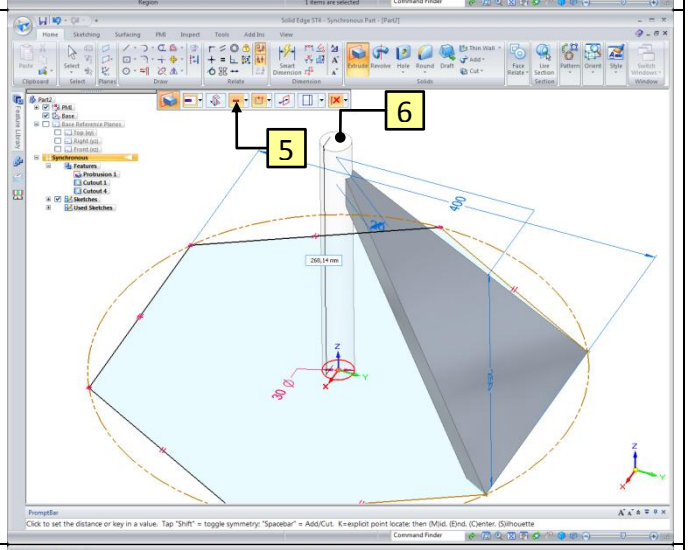
30 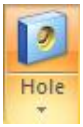 +	1. Click the **Hole** button. 2. Click on the **Hole Options**.	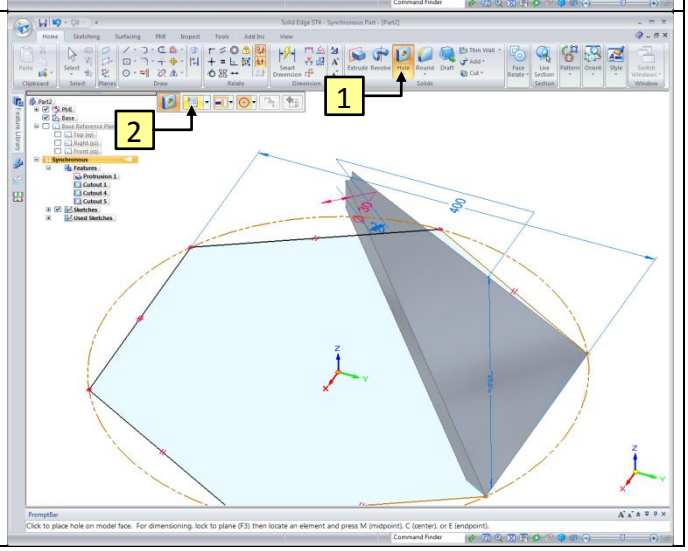

31	Fill in the Hole Options, as shown. 1. Type: **Simple**; 2. Diameter: **10**; 3. Extents: **Finite**; 4. Hole depth: **10**; 5. Click the **OK** button.	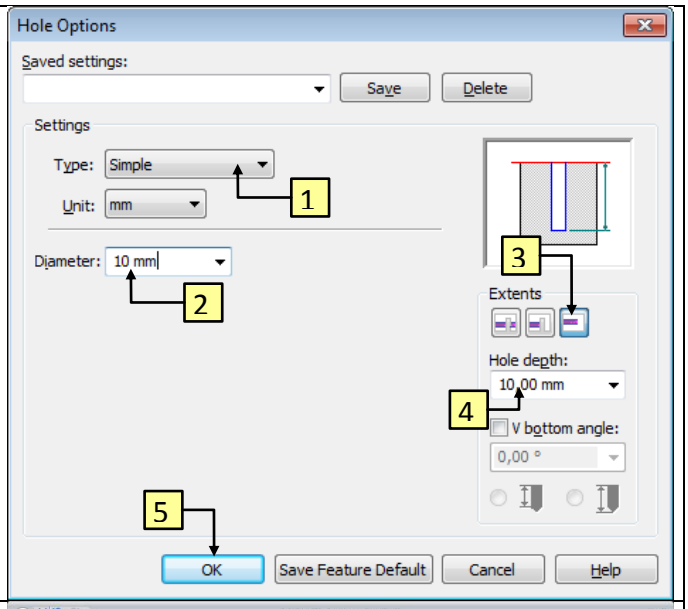
32 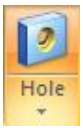	1. Click on the plane to place the Hole, as shown.	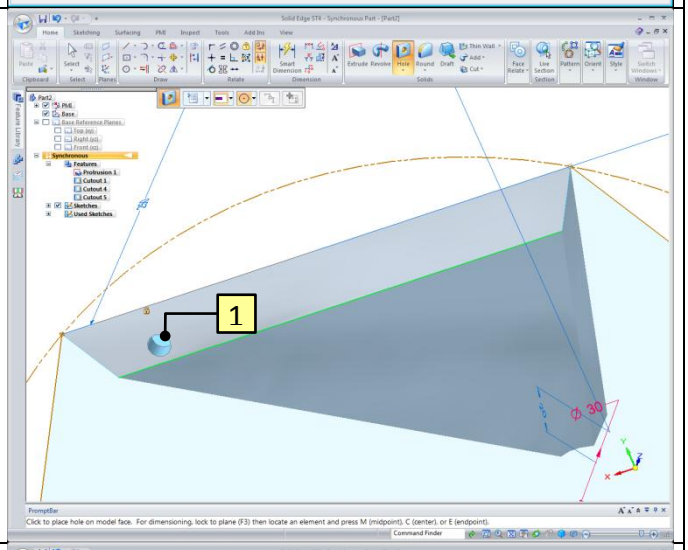
33 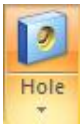	2. Click on the plane to place the second Hole.	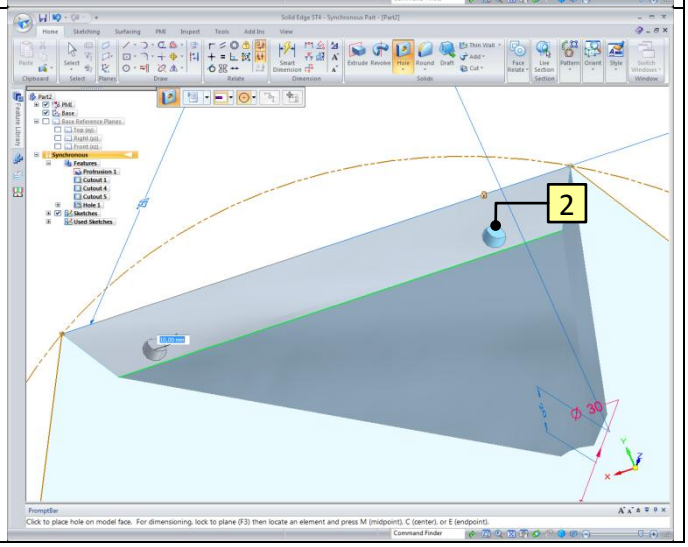

34	1. Click the **Horizontal/Vertical** button. 2. Click on the edge of the right Hole. 3. Click on the edge of the left Hole.	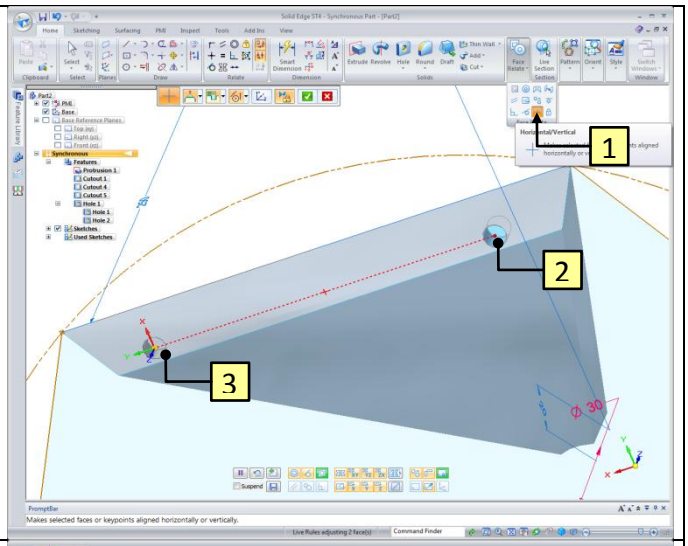
35	1. Click the **Smart Dimension** button. 2. Click on the edge of the left Hole. 3. Click on the horizontal line, as shown. 4. Click to place the dimension. 5. Click on the right green arrow. 6. Key in the value **14** and confirm with **Enter**.	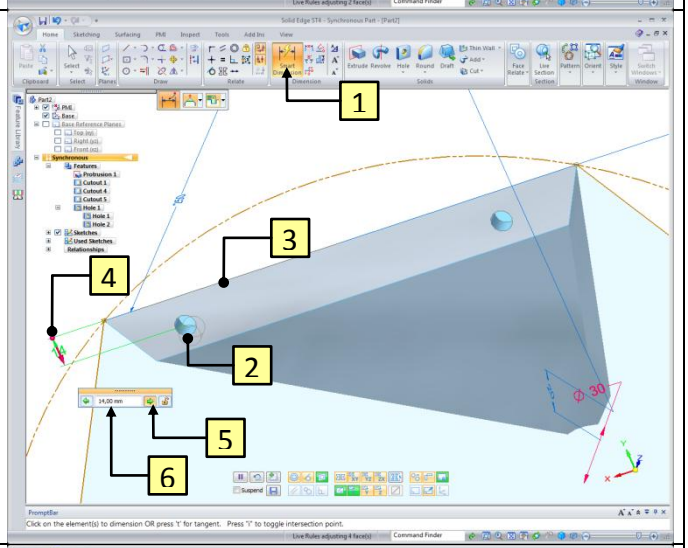
36	If the **Smart Dimension** is still active. 1. Click on the edge of the right Hole. 2. Click on the **Origin**. 3. Click to place the dimension. 4. Key in the value **70** and confirm with **Enter**.	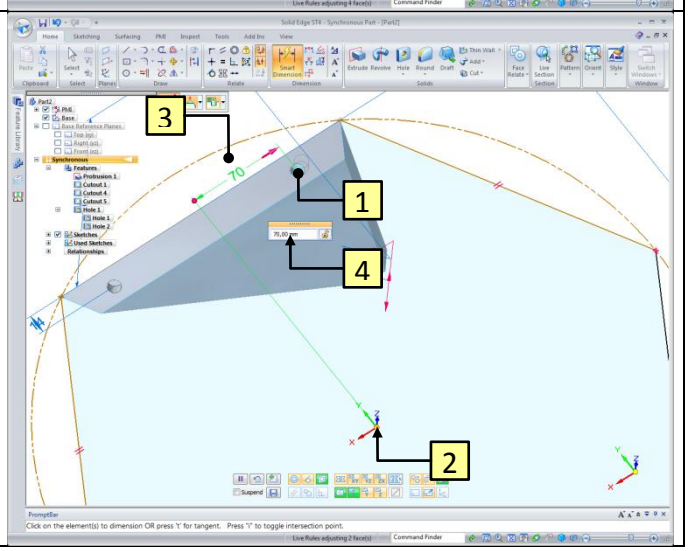

37	5. Click on the edge of the left Hole. 6. Click on the **Origin**. 7. Click to place the dimension. 8. Key in the value **70** and confirm with **Enter**.	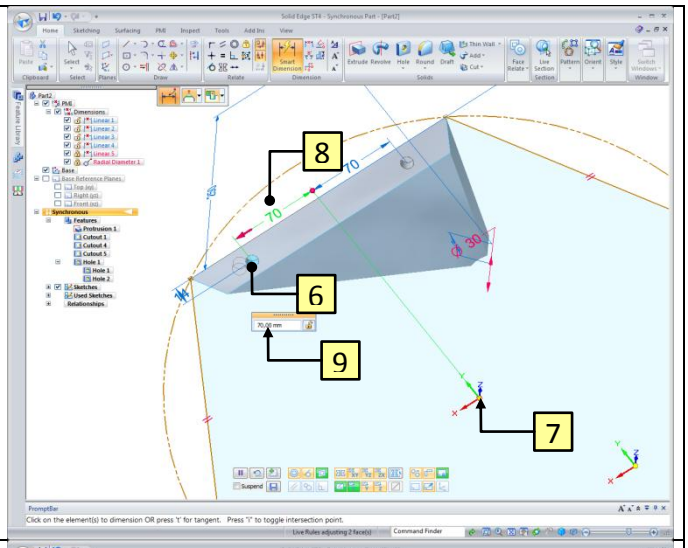
38	1. Click the **Chamfer Equal Setbacks** button. 2. Click on the edge of the Hole, as shown. 3. Key in a value for the chamfer (in this case **1**) and confirm with **Enter**.	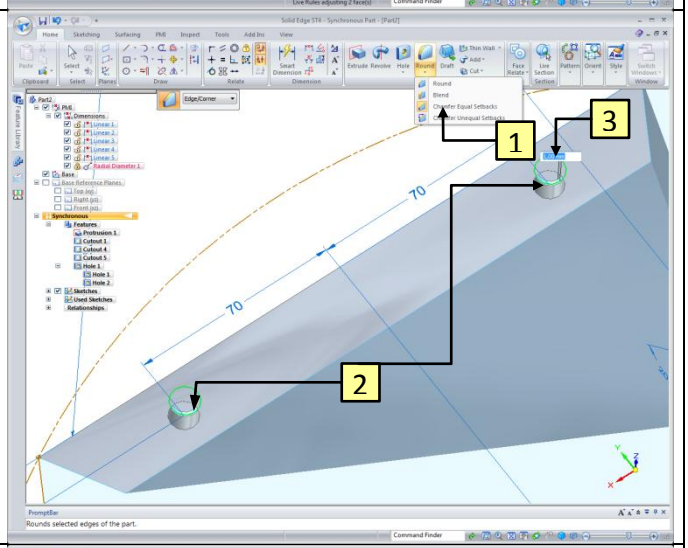
39	Now we set the material property. 1. Click the **Application Button**. 2. Click on **Properties**. 3. Click the **Material Table** button.	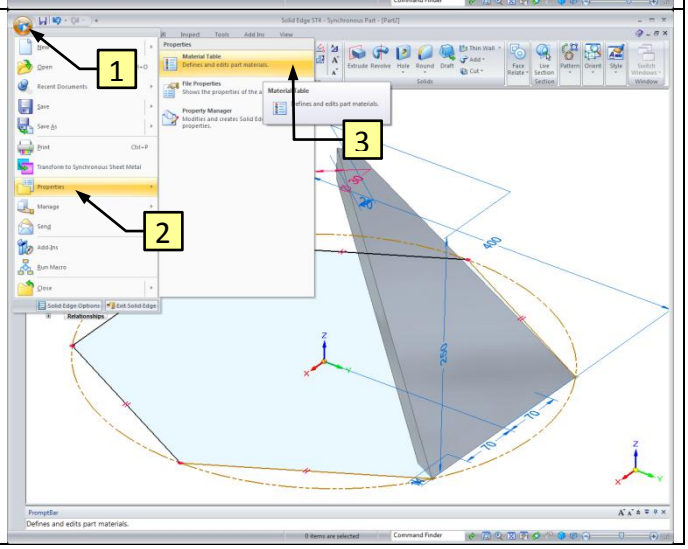

40

1. Choose the material **Wood, Oak**.
2. Click **Apply to Model** to set the material to the part.

Hint:
There are several properties which are connected to a material, like color and density. The density is necessary to determine the weight.

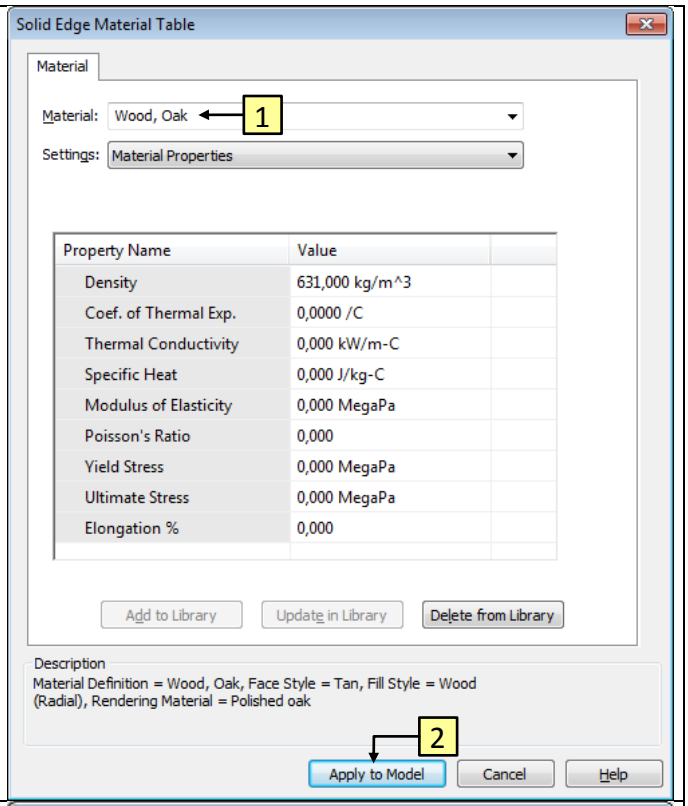

41

The part is ready. Now it must be saved.

1. First press **Ctrl + i** to turn the image to isometric view.
2. Click on the floppy icon.
3. Go to the **Summary** tab**.**
4. Fill in *Roof* at Title.
5. Go to the **Project** tab and fill in the following properties:
   Document Number*: 1011*.
   Revision Number*: A*.
   Project Name: *Bird Feeder*.
6. Click **OK** to close the screen.

Hint:
*All properties of the part are saved at the **File Properties**. These properties will used to fill in a part list.*

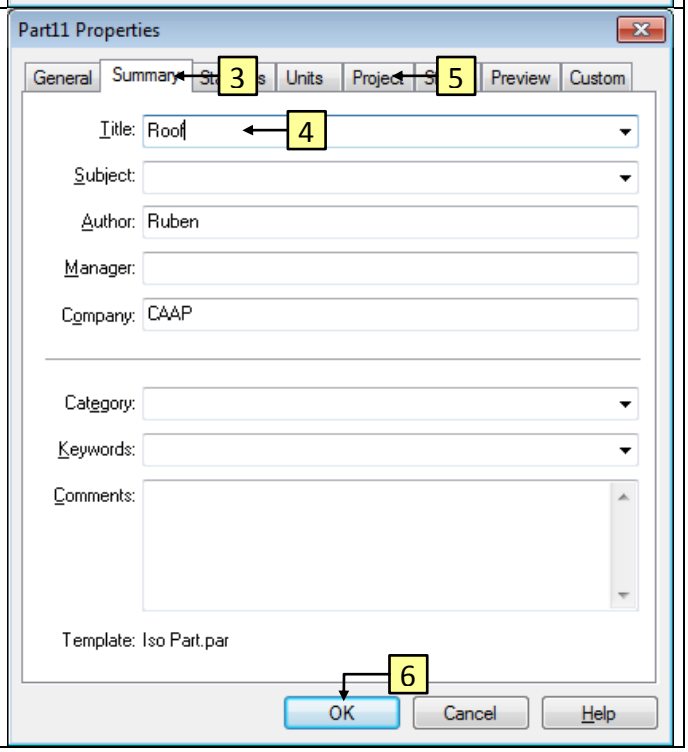
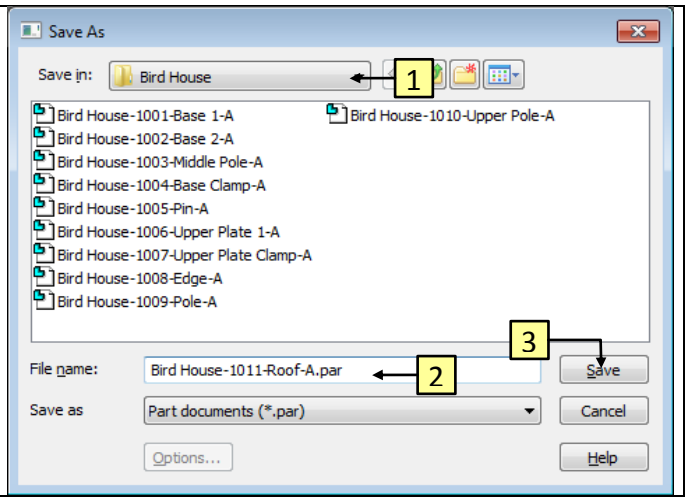
42	1. Create a folder named *Bird Feeder*. 2. Save the document by name *Bird Feeder-1011-Roof-A.par*. 3. Click the **Save** button. 4. Close the file. ***Hint:*** *Save all files of one project in the same folder.*