SOLID EDGE
VELOCITY SERIES

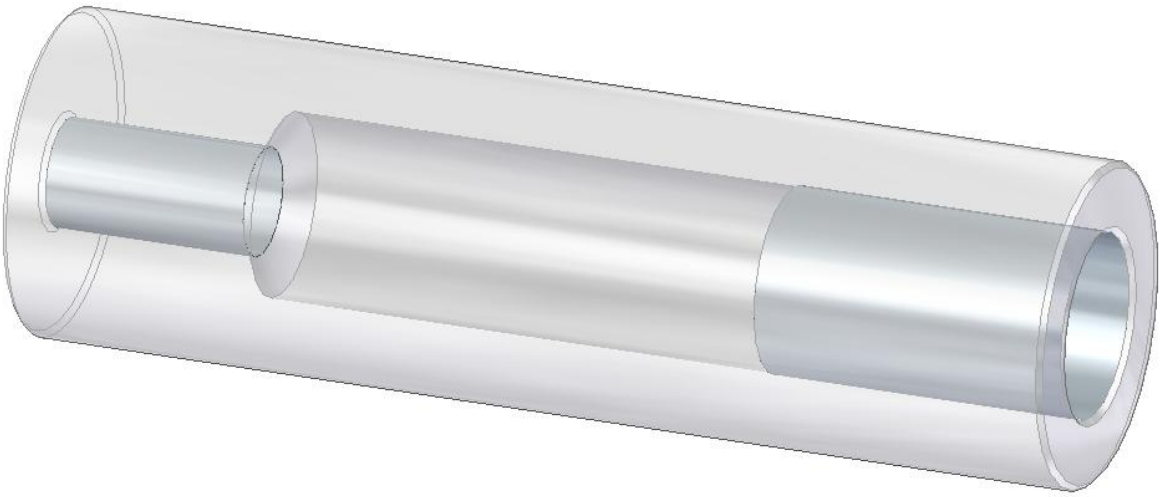

Tutorial: ***Body***

Project: ***Rocket (Synchronous)***

cad / cam / pdm / cae | CAAP®

Solution Partner PLM | SIEMENS

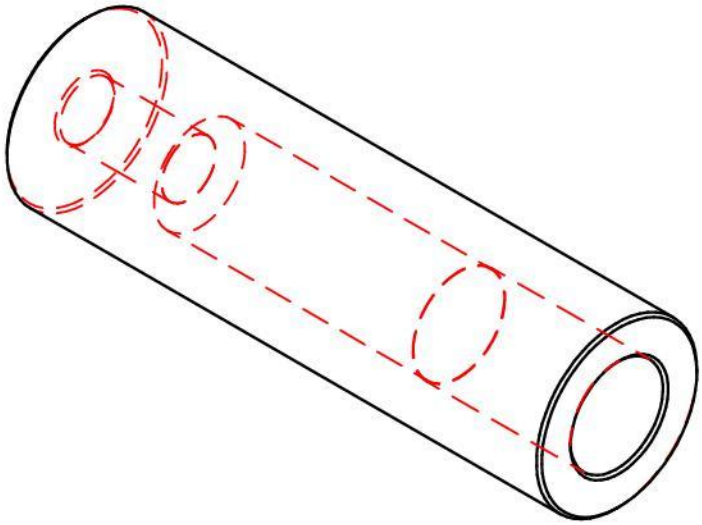

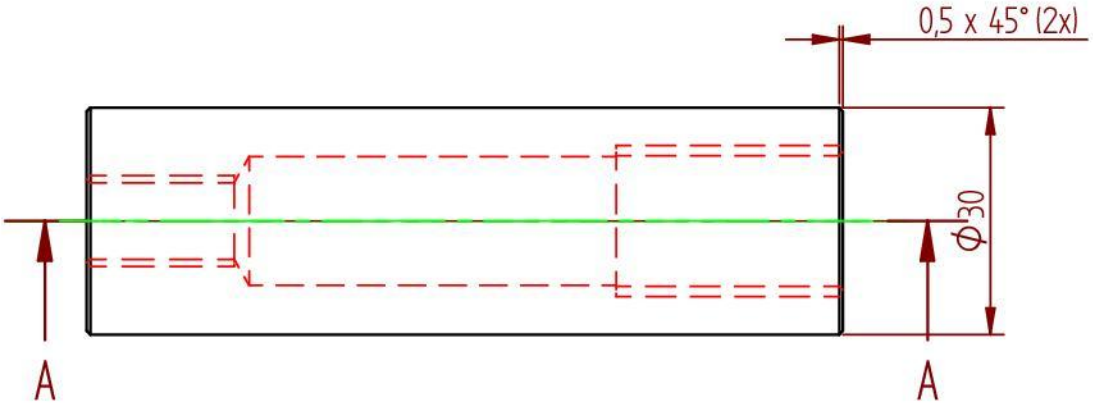

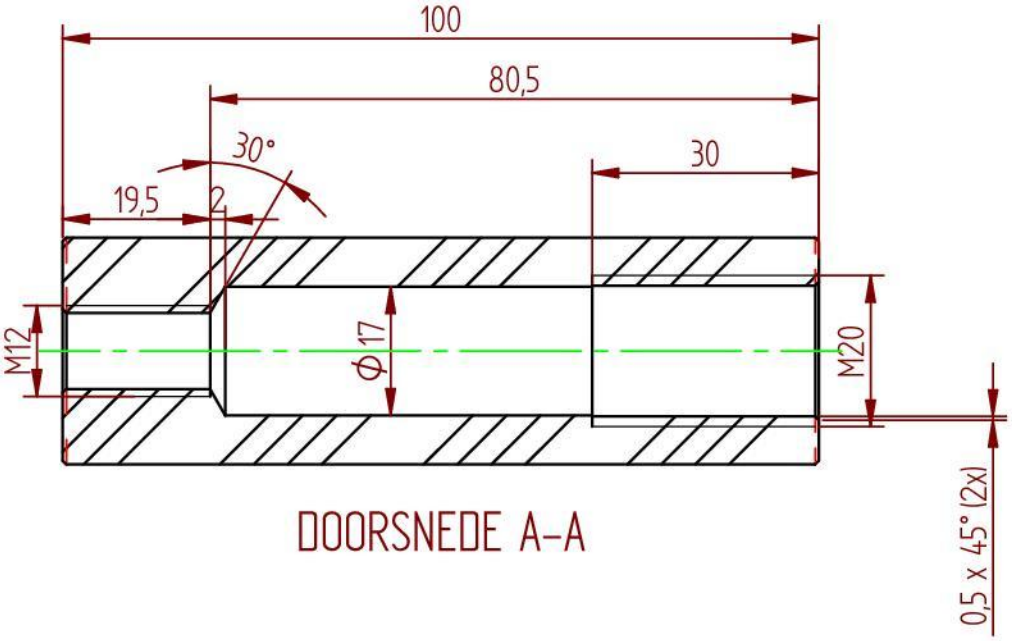

DOORSNEDE A-A

AMERICAN PROJECTION	SCALE : 1:1	AUTHOR : Ruben	CAAP Hamersveldseweg 65 3833 GL Leusden +31(0)33-4573322 www.caap.nl
	DIMENSION UNITS : MM	CLASS (DEPARTMENT) : -	
	DATE : 29-10-2011	CHECKED BY : -	

MATERIAL : ABS Plastic, high impact	TITEL :	NUMBER :	REV:	SIZE:
PROJECT: Rocket	Body	1001	A	A4

1	1. Start **Solid Edge.** 2. Click on **ISO Part.** 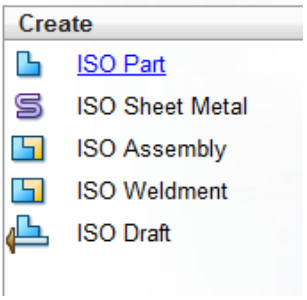	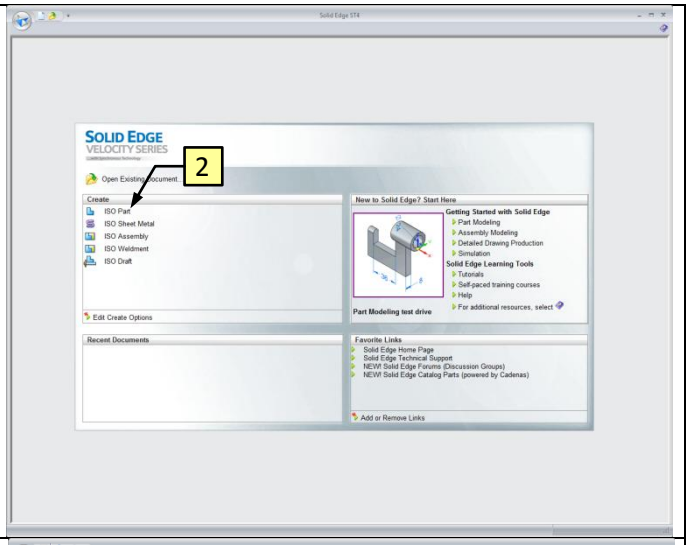
2	1. Click the **Circle by Center Point** button. 2. Point at the **Origin** and wait until the icon appears before clicking.	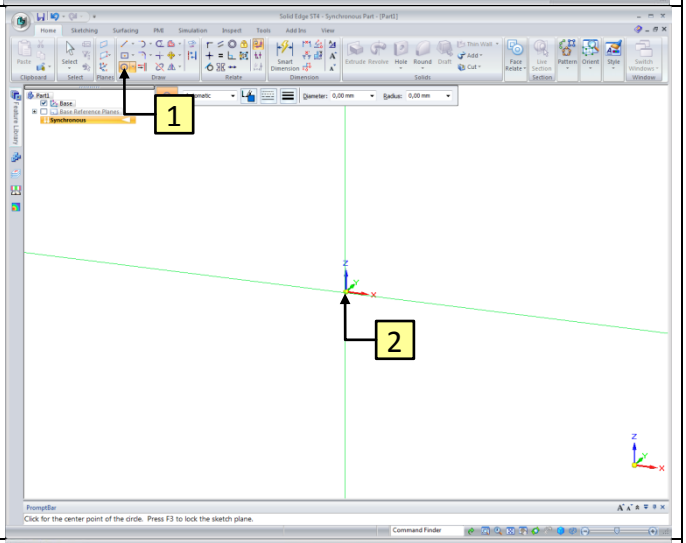
3	3. Click for the diameter.	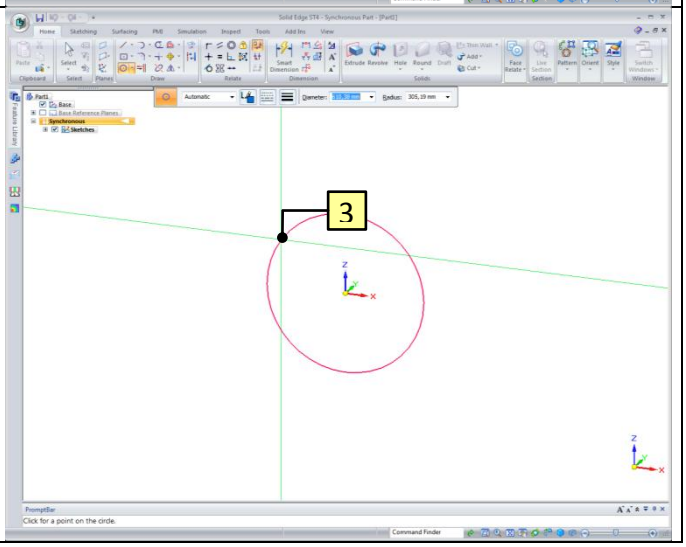

4	1. Click the **Select** button. 2. When you hover over the Region, it will turn red. Click on the Region, as shown.	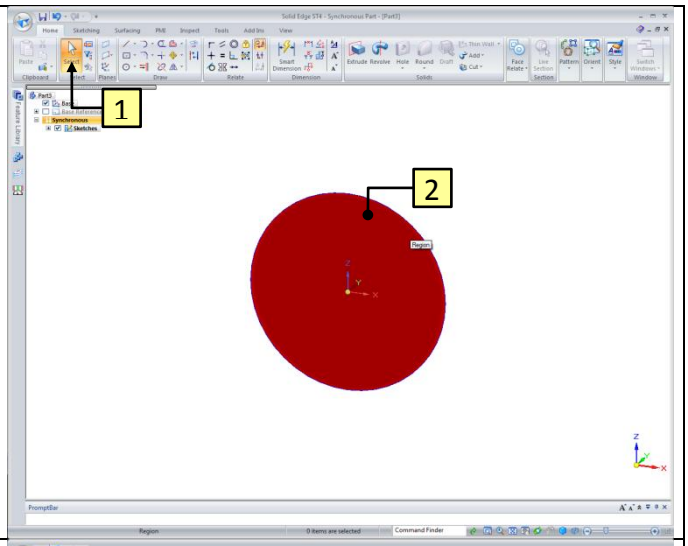
5	3. When you hover over the arrow, it will turn red. Click on the arrow, as shown. 4. Click the **Extrude – Symmetric** button.	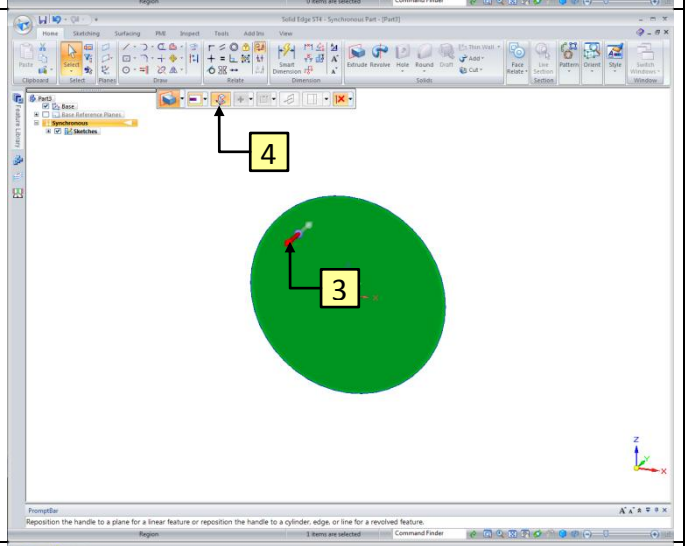
6	1. Type **100** and confirm with **Enter**.	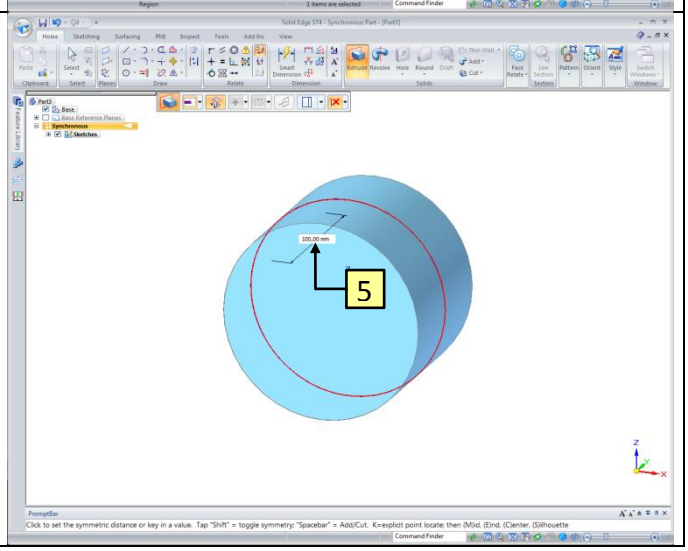

7	1. Click the **Smart Dimension** button. 2. Click on the circle. 3. Click to place the dimension.	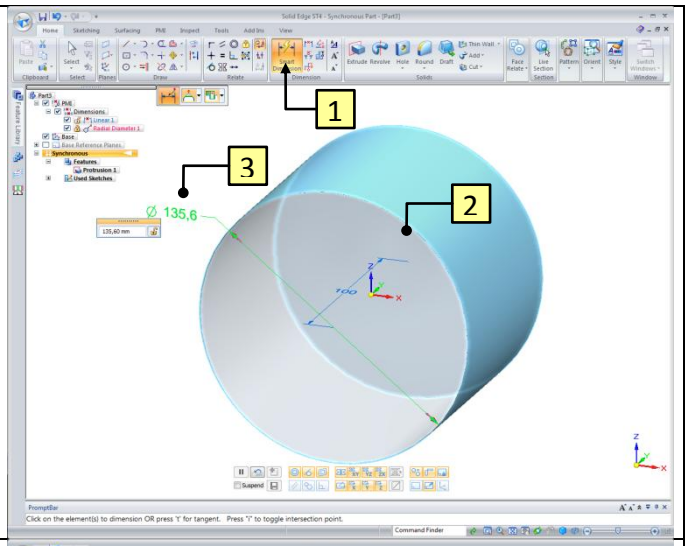
8	4. Key in the value **10** and confirm with **Enter**.	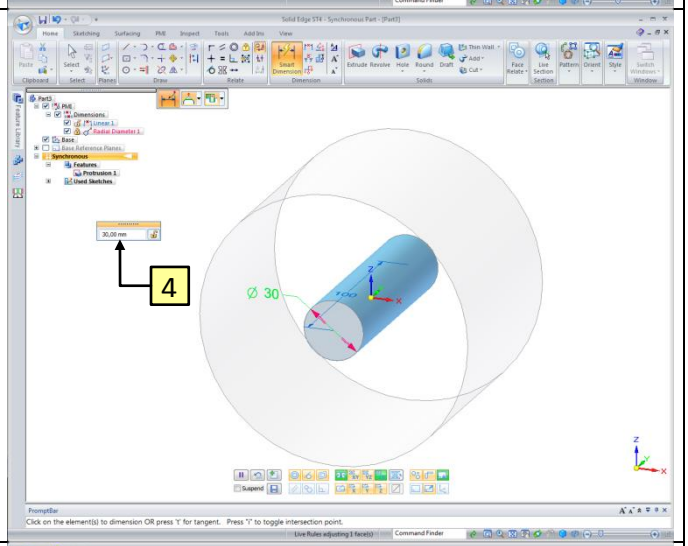
9 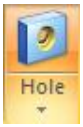 +	1. Click the **Hole** button. 2. Click on the **Hole Options**.	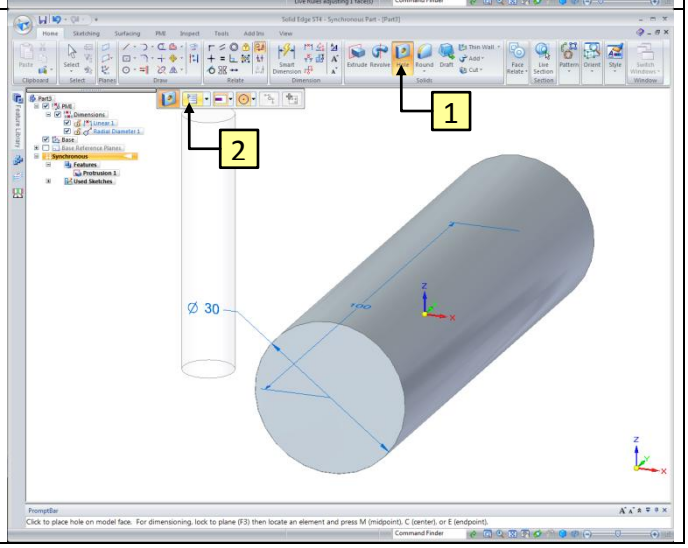

11	Fill in the Hole Options, as shown. 1. Type: **Threaded**; 2. Thread: **M20**; 3. To hole extent; 4. Extents: **Finite extent**; 5. Hole depth: **30**; 6. Click the **OK** button.	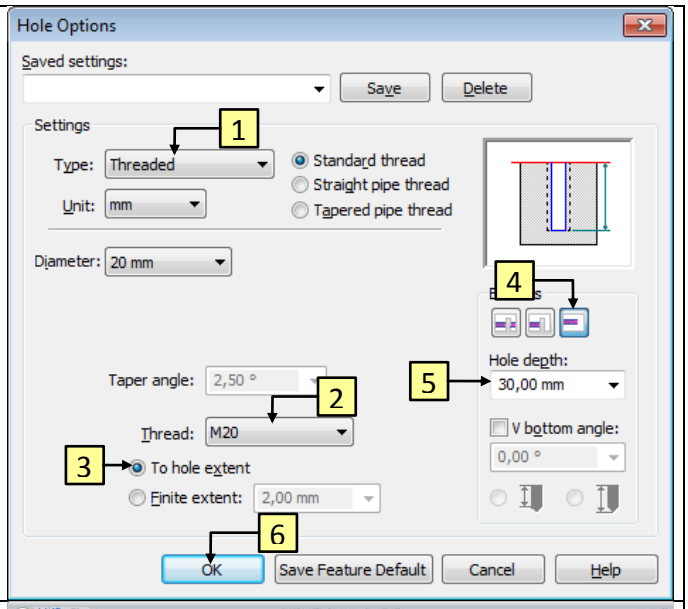
11 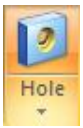	1. Make sure the **Center Point** option at the **KeyPoint Options** is selected. 2. Hold the cursor on the edge of the cylinder as shown, wait until the icon appears and click. The Hole will centre automatically.	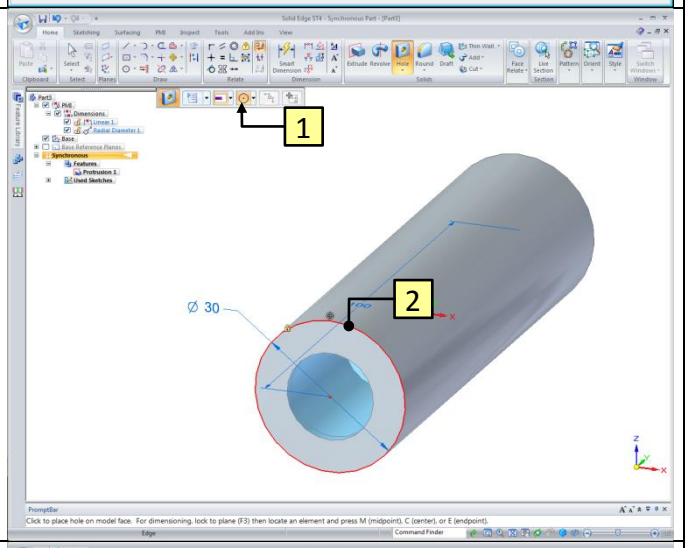
12 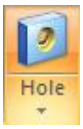 +	1. Turn the view. 2. Click the **Hole** button again. 3. Click on the **Hole Options**.	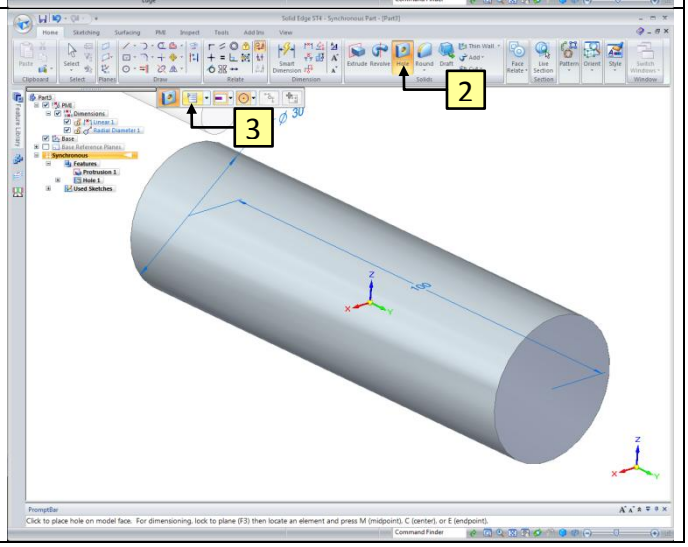

13	Fill in the Hole Options, as shown. 1. Type: **Threaded**; 2. Thread: **M12**; 3. To hole extent; 4. Extents: **Finite extent**; 5. Hole depth: **19,50**; 6. Click the **OK** button**.**	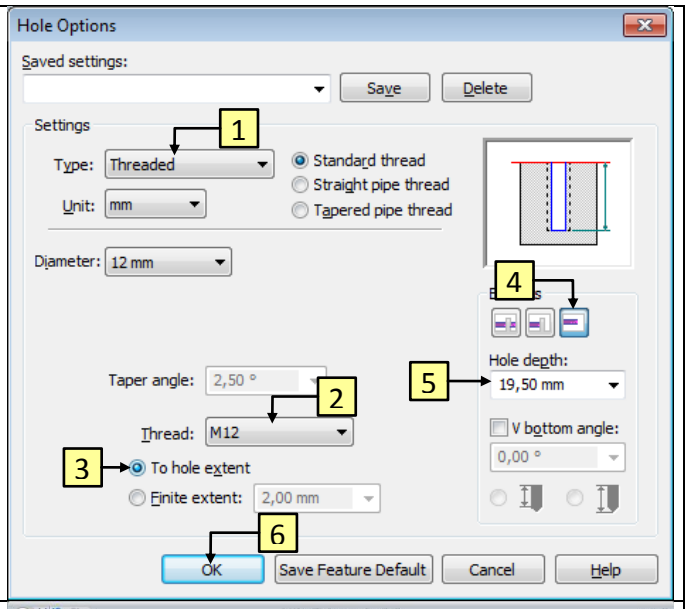
14 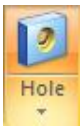	1. Make sure the **Center Point** option at the **KeyPoint Options** is selected. 2. Hold the cursor on the edge of the cylinder as shown, wait until the icon appears and click. The Hole will centre automatically.	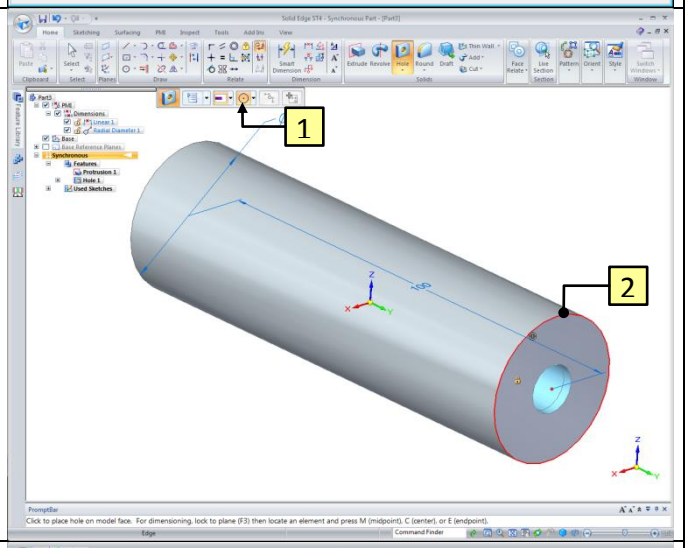
15	1. Click the **Line** button. 2. Click on the **Right (yz)** plane in the PathFinder.	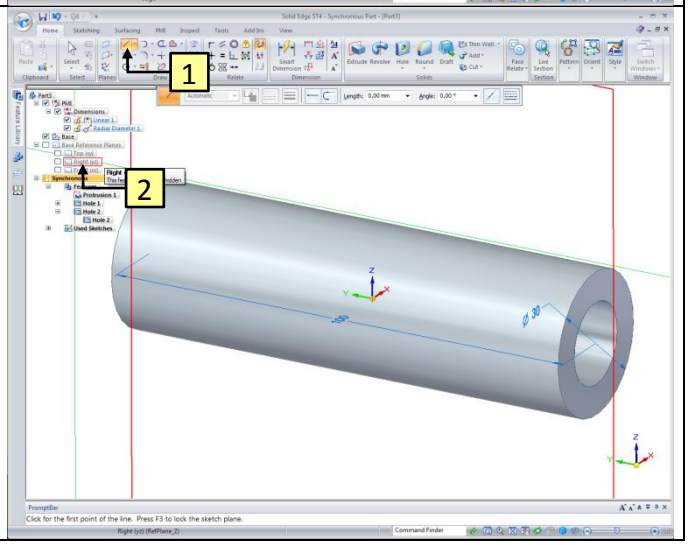

16	3. Draw the profile, as shown.	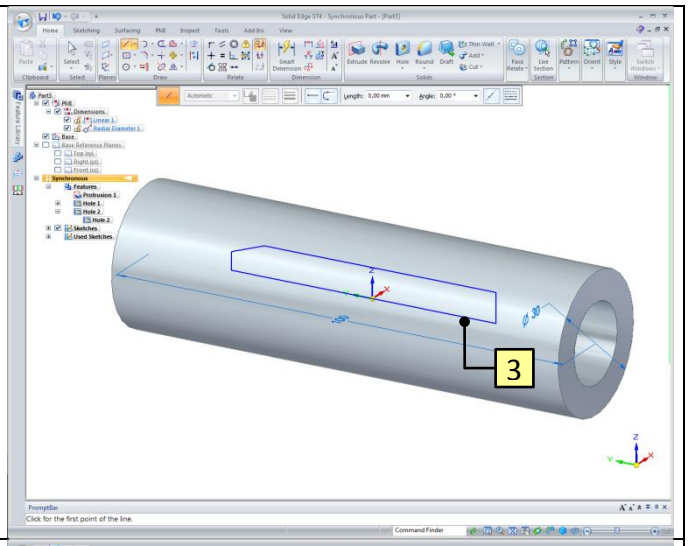
17	1. Click the **Smart Dimension** button. 2. Click on the vertical line, as shown. 3. Click on the left vertical line. 4. Click to place the dimension. 5. Key in the value **19,5** and confirm with **Enter**.	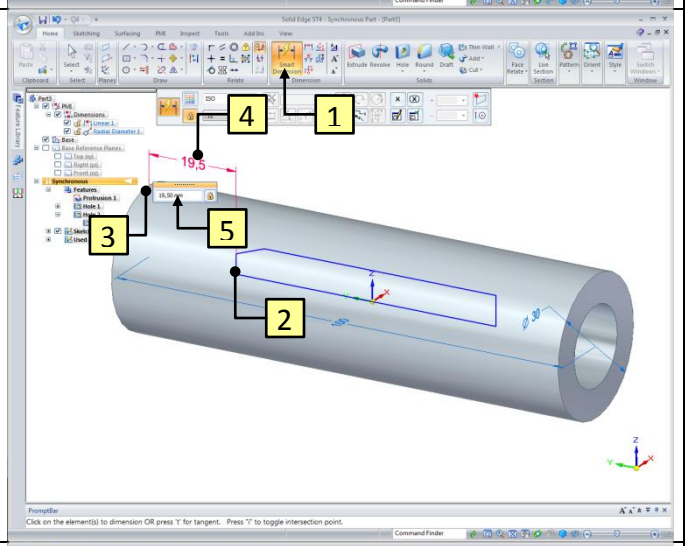
18	If the **Smart Dimension** is still active. 6. Click on the horizontal line. 7. Click to place the dimension. 8. Key in the value **50,5** and confirm with **Enter**.	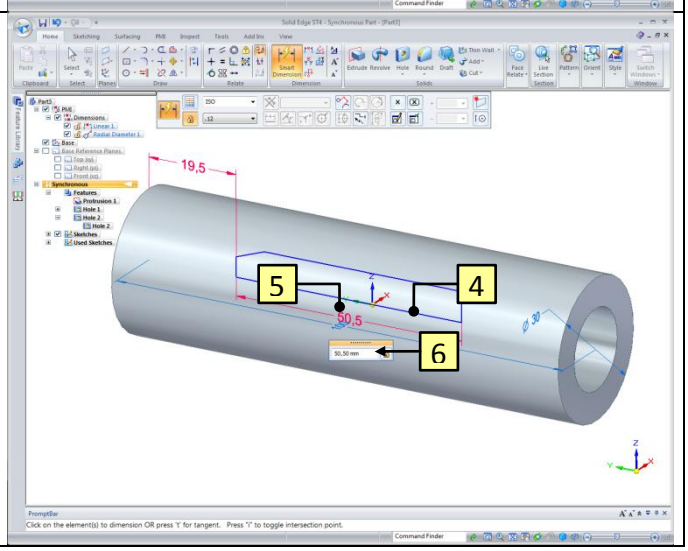

19	1. Click the **Connect** button. 2. Point the cursor at the middle point of the horizontal line and wait until the icon appears before clicking. 3. Point at the Y-axis and wait until the icon appears before clicking.	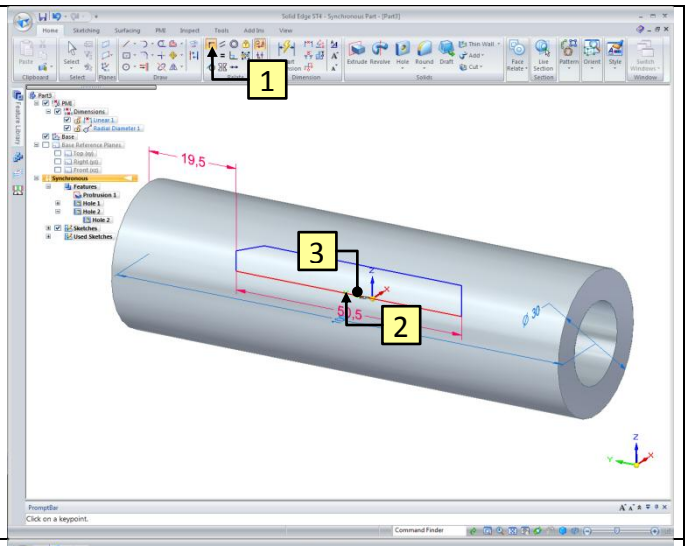
20	1. Click the **Symmetric Diameter** button. 2. Click on the horizontal line. 3. Click on the other horizontal line, as shown. 4. Click to place the dimension. 5. Key in the value **17** and confirm with **Enter**.	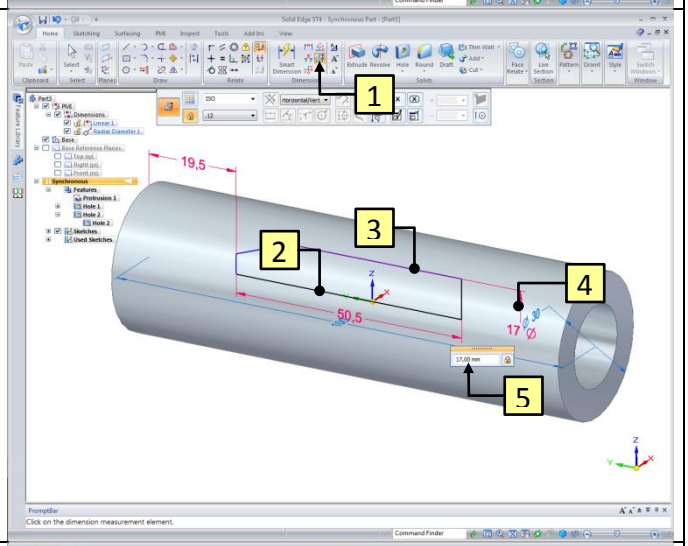
21	1. Click the **Smart Dimension** button. 2. Click on the left vertical line. 3. Click on the left end point of the horizontal line, as shown. 4. Click to place the dimension. 5. Key in the value **2** and confirm with **Enter**.	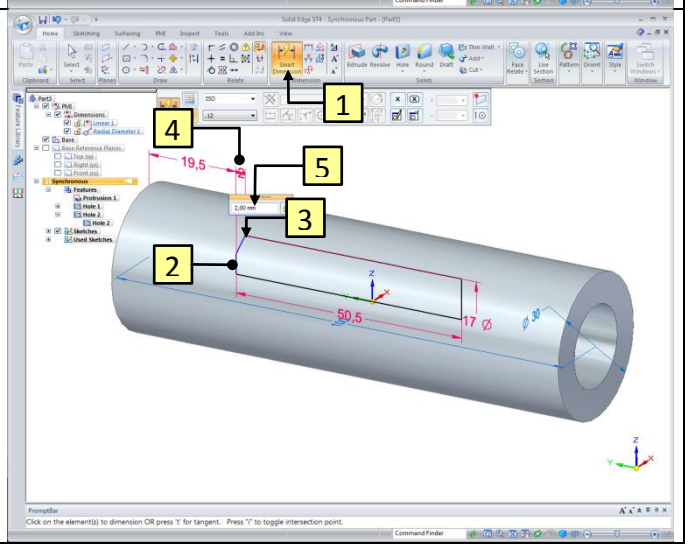

22	1. Click the **Angle Between** button. 2. Click on the slanted line. 3. Click on the horizontal line, as shown. 4. Click to place the dimension. 5. Key in the value **120** and confirm with **Enter**.	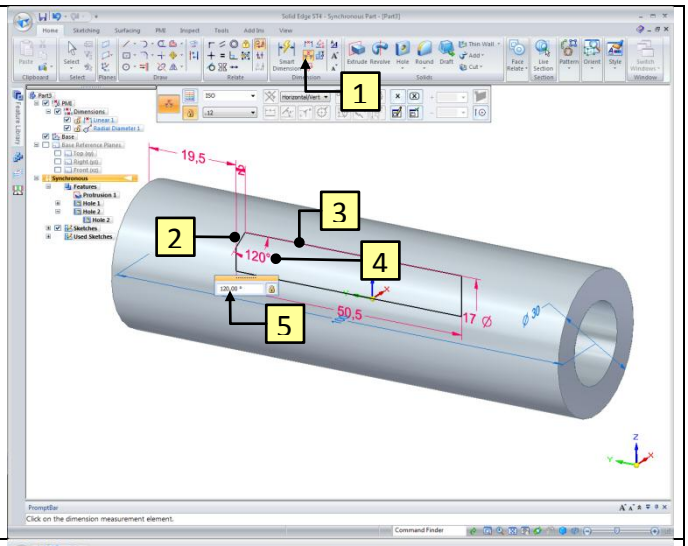
23	1. Click the **Select** button. 2. Point the cursor on the profile and wait until the icon next to the cursor appears. Click the RMB to open the quickpick. 3. Click in the Quickpick on the Region.	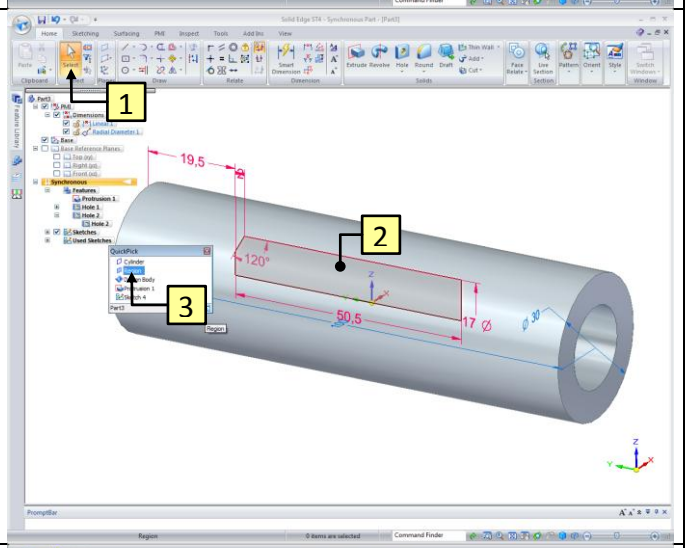
24	4. Click on the blue doth of the Steering Wheel. 5. Click on the Y-axis.	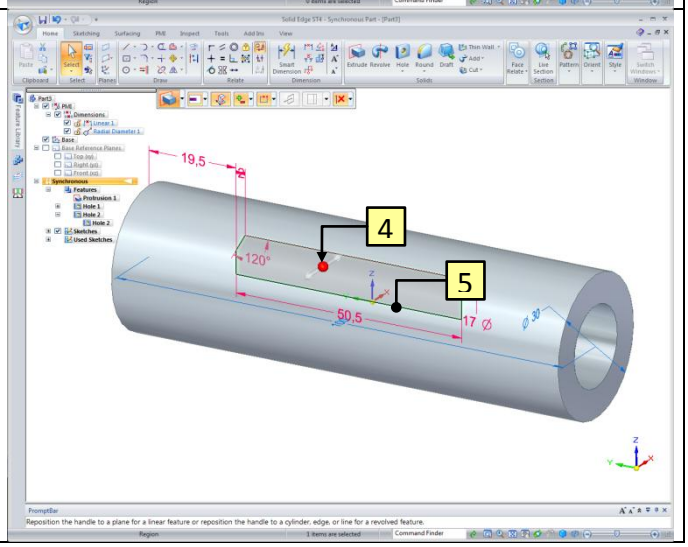

25	1. Click on the **Remove** option. 2. When you hover over the **Torus** of the Steering Wheel, it will turn red. Click on the **Torus**, as shown.	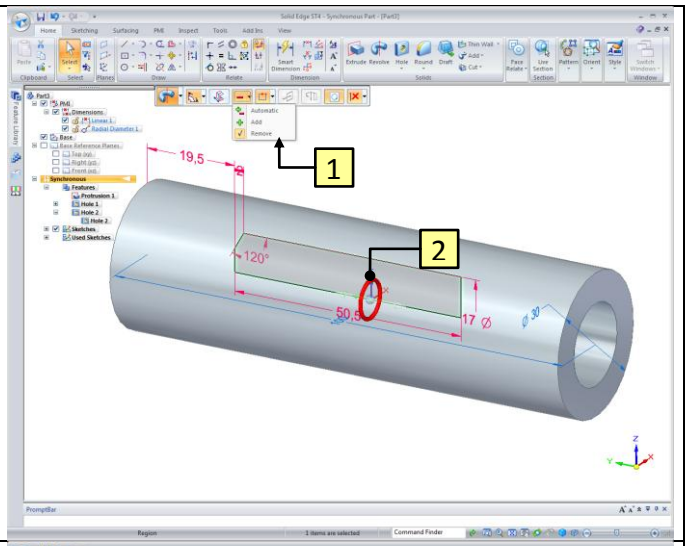
26	3. Click the **360** button.	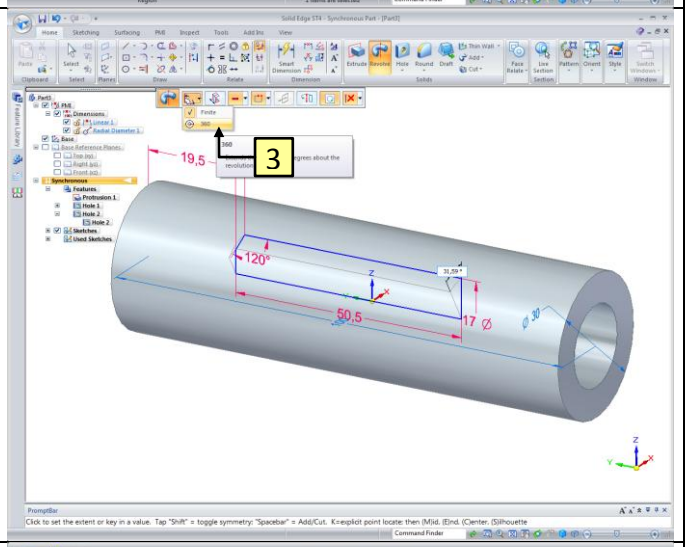
27	1. Click the **Chamfer by Equal Setbacks** button. 2. Click on the edge's, as shown. 3. Key in a value for the chamfer (in this case **0,5**) and confirm with **Enter**.	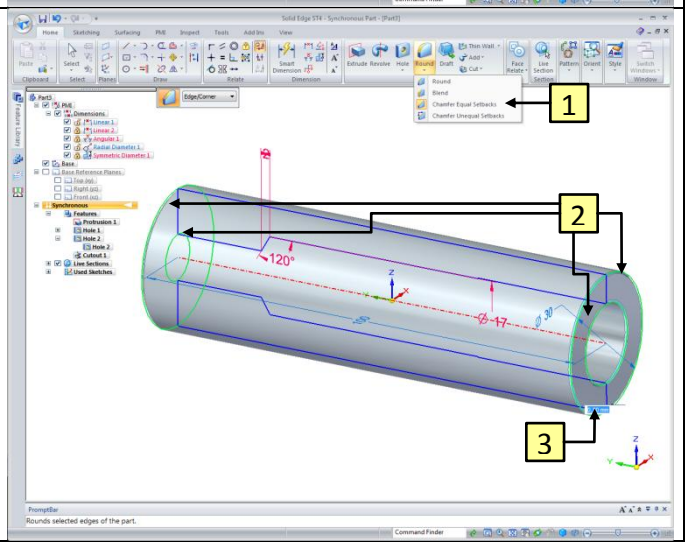

28	Now we set the material property. 1. Click the **Application Button**. 2. Click on **Properties**. 3. Click the **Material Table** button.	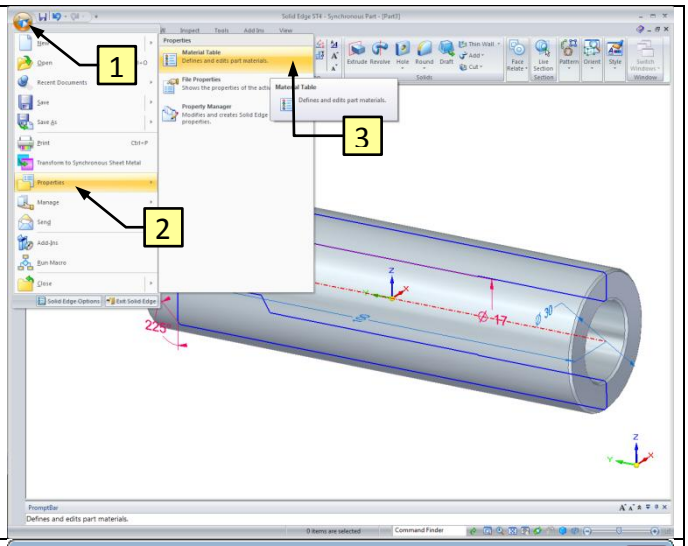
29	1. Choose the material **ABS, high impact**. 2. Click **Apply to Model** to set the material to the part. ***Hint:*** *There are several properties which are connected to a material, like color and density. The density is necessary to determine the weight.*	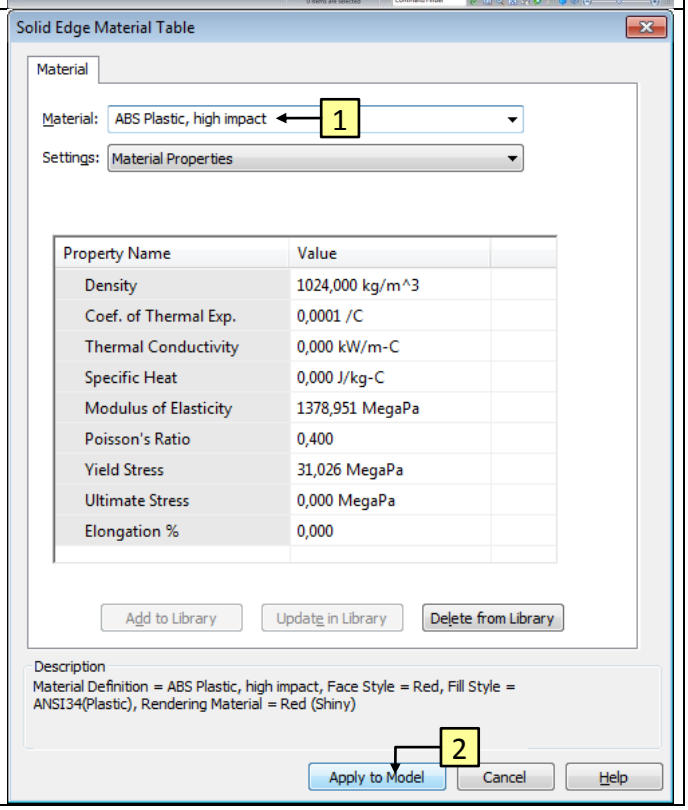

30	Now we can paint the part. 1. Click on **View → Part Painter**.	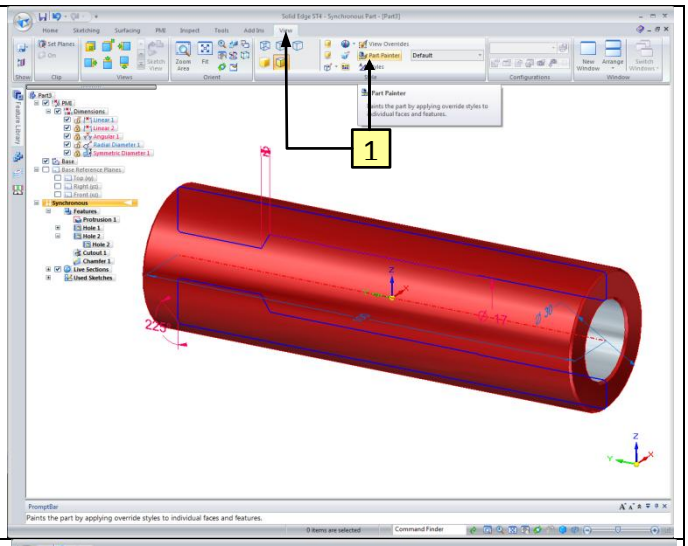
31	1. Select the style **White (clear)**. 2. Click on the part. 3. Click the **Close** button. ***Hint:*** *If you don't get the follow message at step 32, please set the default settings again.*	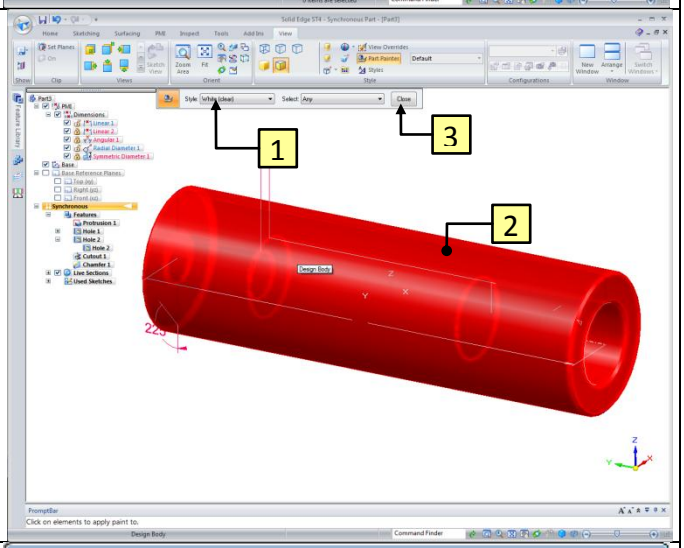
32	The part is ready. Now it must be saved. 1. First press **Ctrl + i** to turn the image to isometric view. 2. Click on the floppy icon. 3. Go to the **Summary** tab**.** 4. Fill in *Body* at Title. 5. Go to the **Project** tab and fill in the following properties: Document Number*: 1001*. Revision Number*: A*. Project Name: *Rocket*. 6. Click **OK** to close the screen. ***Hint:*** *All properties of the part are saved at the **File Properties**. These properties will used to fill in a part list.*	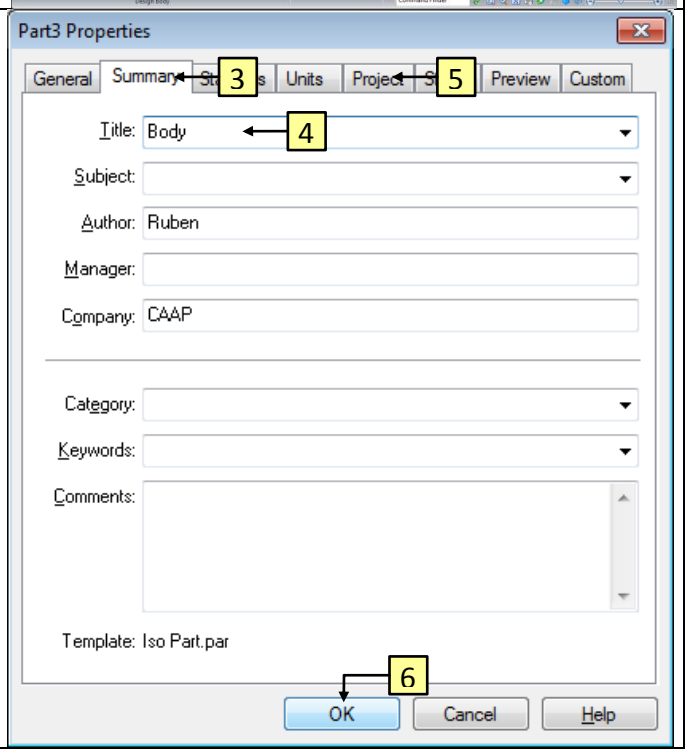
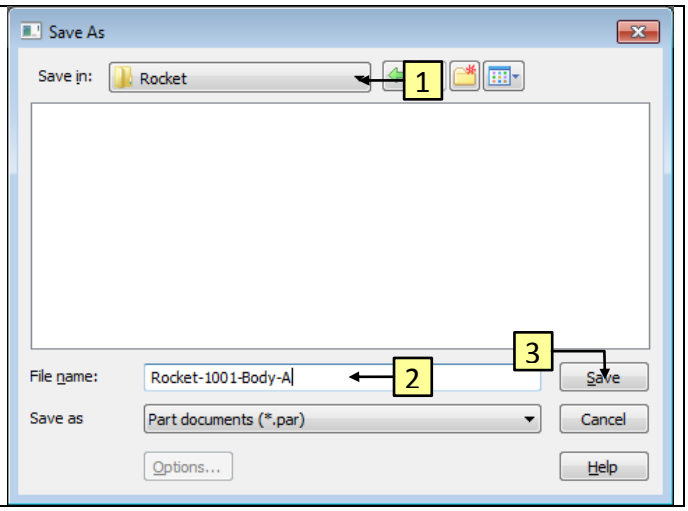
33	1. Browse to the folder *Rocket*. 2. Save the document by name *Rocket-1001-Body-A.par*. 3. Click the **Save** button. 4. Close the file. ***Hint:*** *Save all files of one project in the same folder.*