SOLID EDGE
VELOCITY SERIES

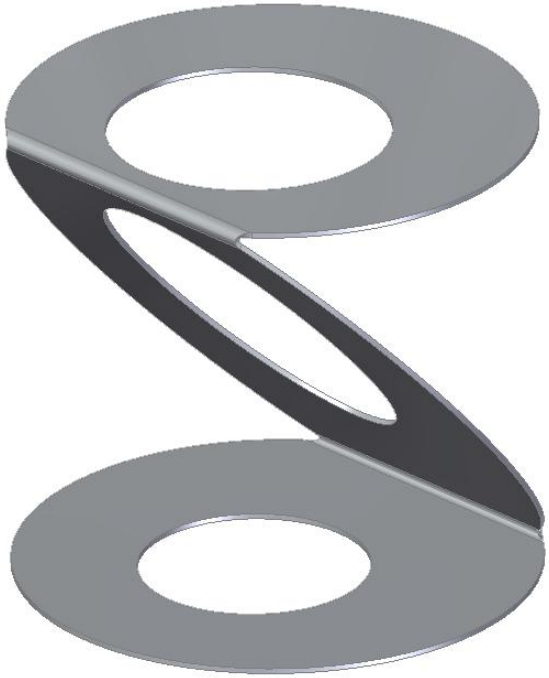

Tutorial: ***Base***

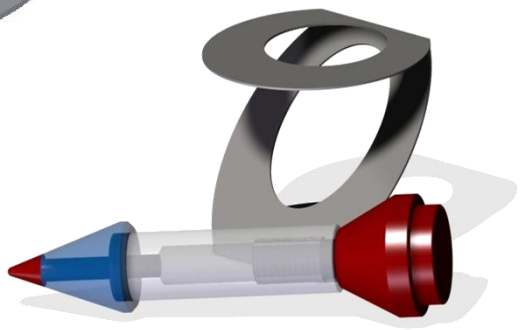

Project: ***Rocket (Synchronous)***

cad / cam / pdm / cae | CAAP®

Solution Partner PLM | SIEMENS

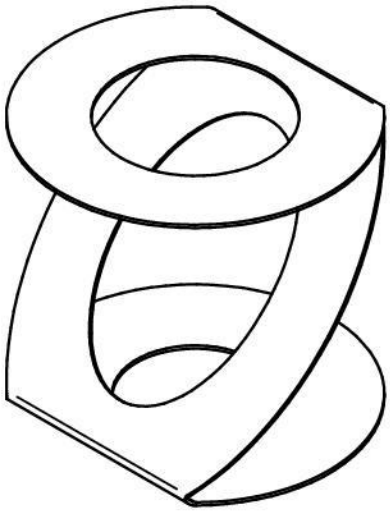

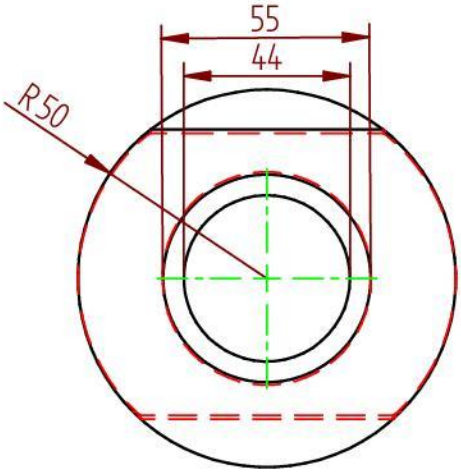

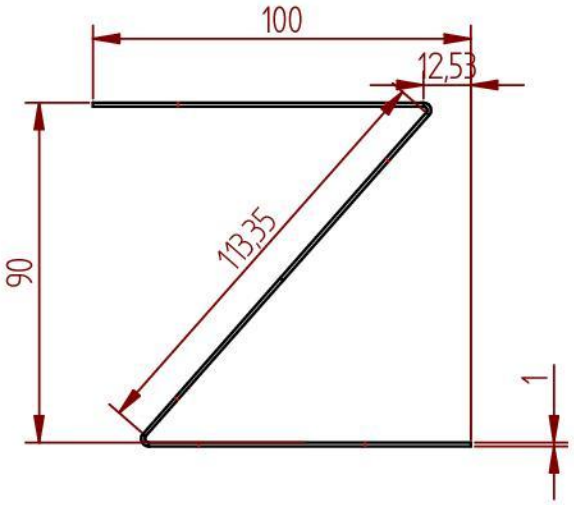

AMERICAN PROJECTION	SCALE : 2:1	AUTHOR : Ruben	CAAP Hamersveldseweg 65 3833 GL Leusden +31(0)33-4573322 www.caap.nl
	DIMENSION UNITS : MM	CLASS (DEPARTMENT) : -	
	DATE : 29-10-2011	CHECKED BY : -	

MATERIAL : Steel	BENAMING :	NUMBER :	REV:	SIZE:
PROJECT: Rocket	Base	2001	A	A4

1 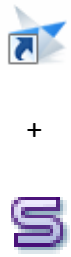	1. Start **Solid Edge.** 2. Click on **<u>ISO Sheet Metal.</u>** 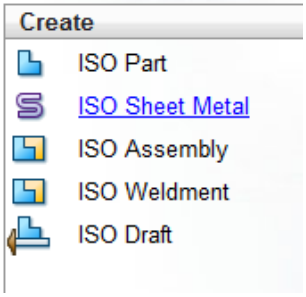	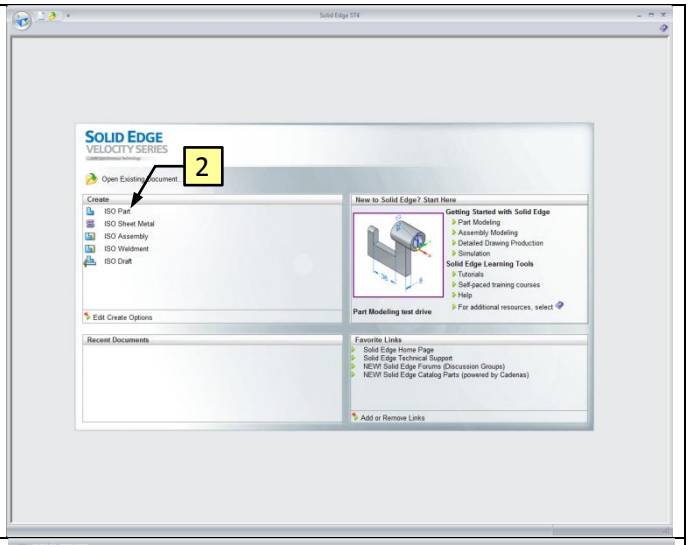
2	1. Click the **Line** button. 2. Draw the profile. Make sure the lines are horizontal. This is shown with the icons.	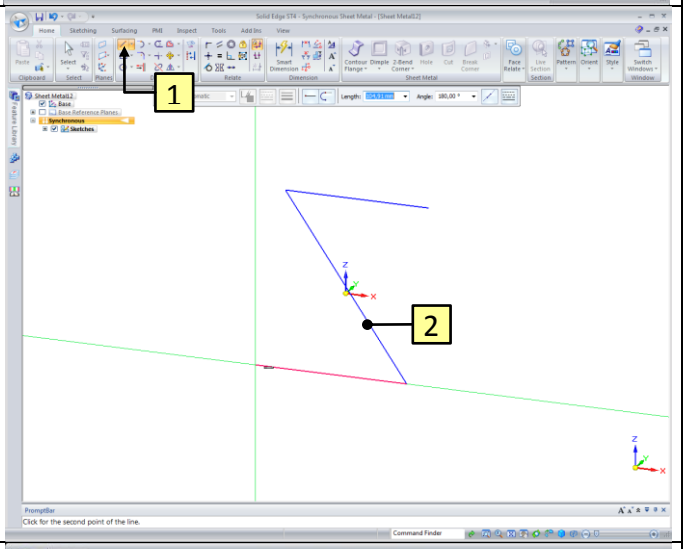
3	1. Click the **Connect** button. 2. Point at the middle of the slanted line and wait until the icon appears before clicking. 3. Point at the **Origin** and wait until the icon appears before clicking.	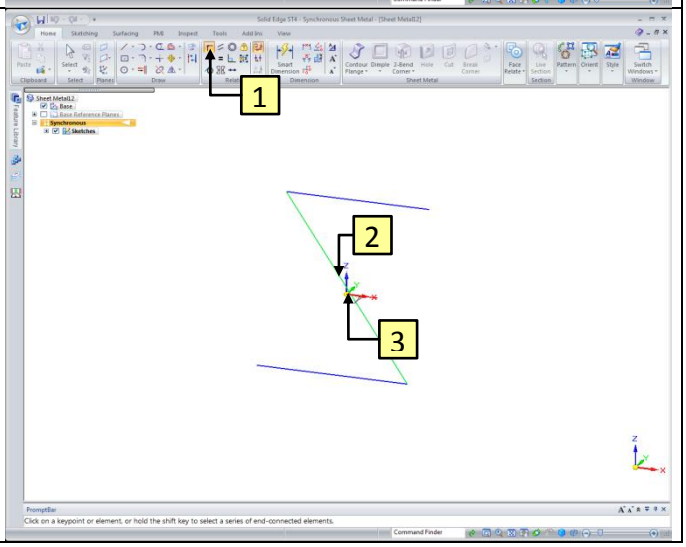

4	1. Click the **Smart Dimension** button. 2. Click on the horizontal line. 3. Click on the other horizontal line, as shown. 4. Click to place the dimension. 5. Key in the value **90** and vonfirm with **Enter**.	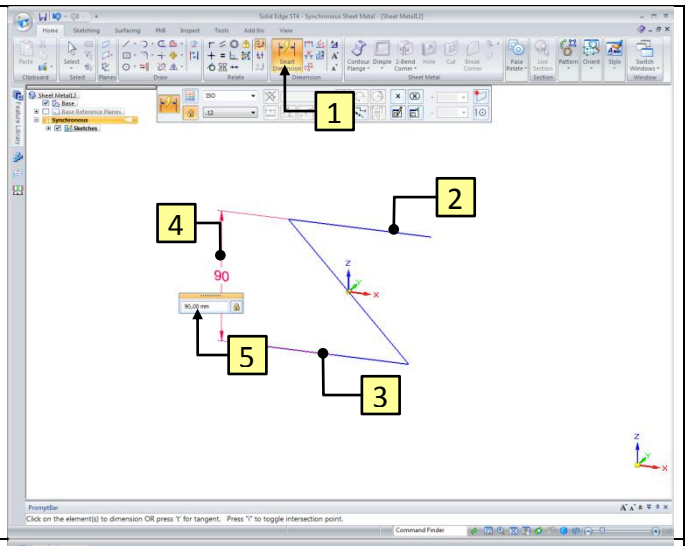
5	If the **Smart Dimension** is still active. 1. Click on the right endpoint of the horizontal line. 2. Point at the left endpoint of the other horizontal line, as shown, and wait until the icon appears before clicking. 3. Click to place the dimension. 4. Key in the value **100** and confirm with **Enter**.	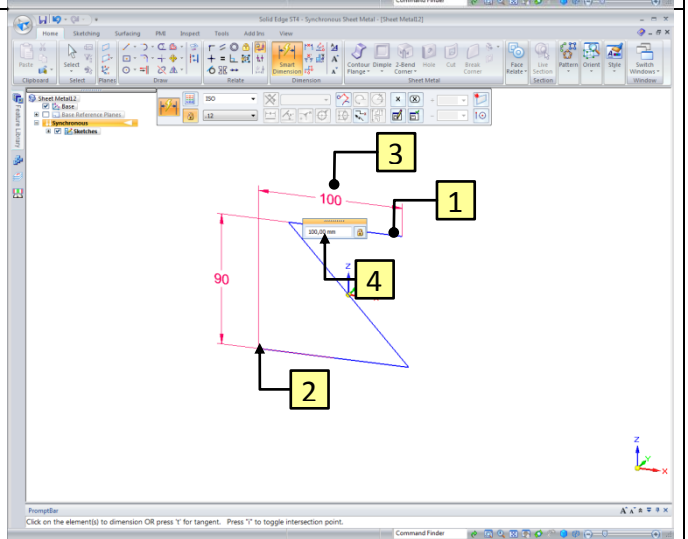
6	1. Click on the slanted line. 2. Click to place the dimension. 3. Key in the value **120** and confirm with **Enter**.	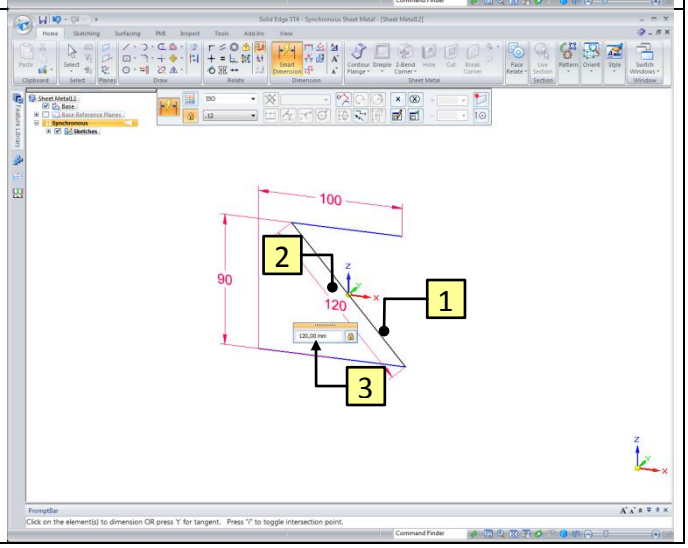

7	4. Click on the left endpoint of the horizontal line. 5. Point at the left endpoint of the other horizontal line, as shown, and wait until the icon appears before clicking. 6. Click to place the dimension. 7. Key in the value **12,45** and confirm with **Enter**.	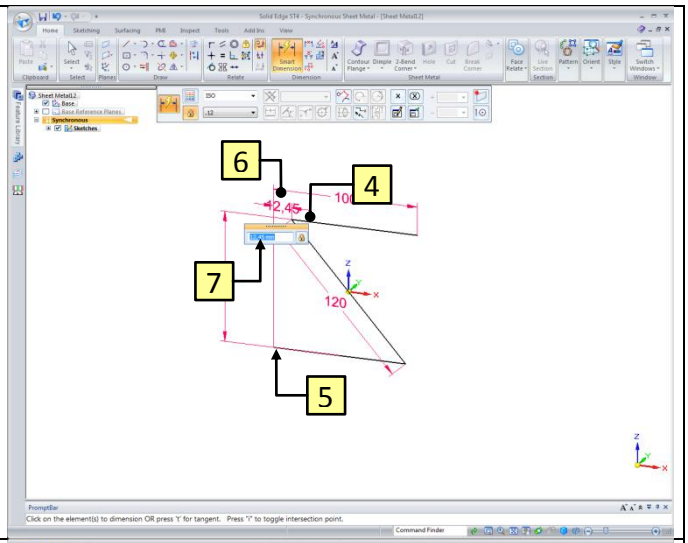
8	1. Click the **Contour Flange** button. 2. Click on the sketch. 3. When you hover over the arrow, it will turn red. Click on the arrow, as shown.	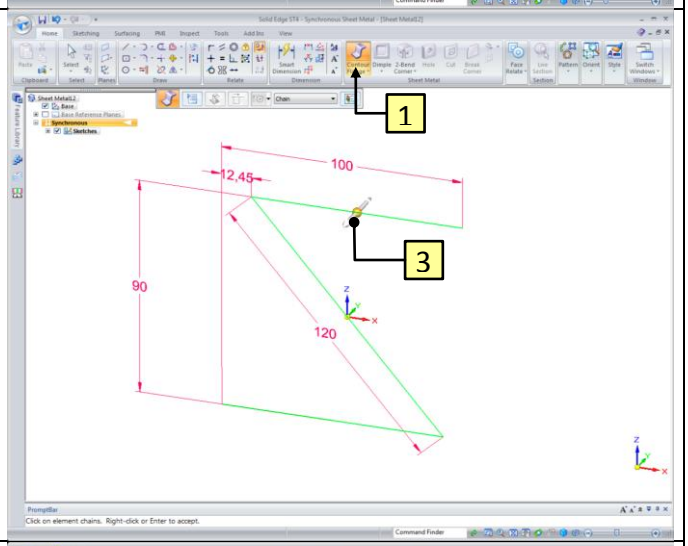
9	4. Make sure the arrow is pointed up. 5. Click the **Symmetric Extent** button. 6. Key in the value **100** and confirm with **Enter**.	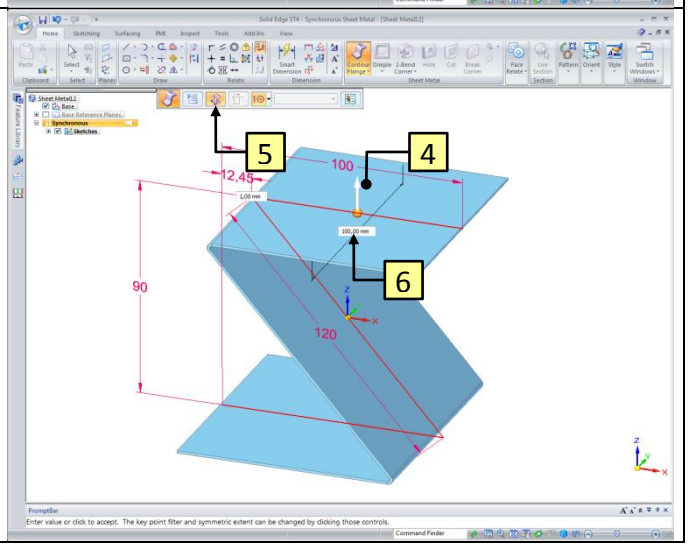

10 +	1. Click the **Circle by Centre Point** button. 2. Point the cursor at the plane and wait until the lock icon appears. Click on the lock icon.	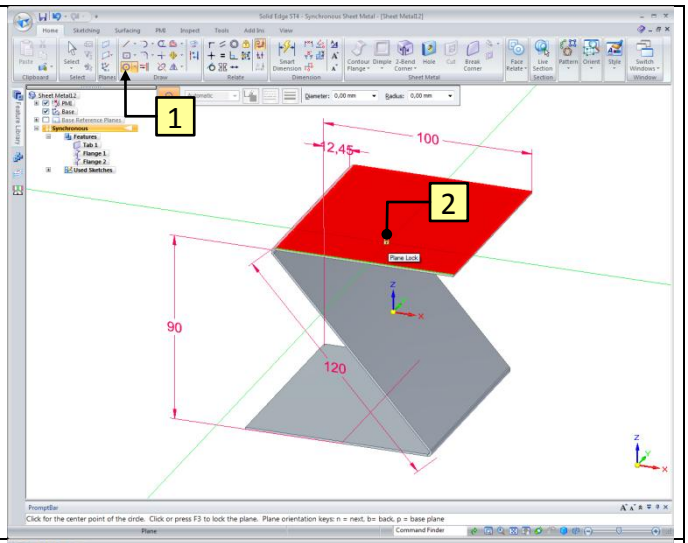
11	3. Pointed the cursor at the Origin. 4. Pointed the cursor at the projected line, as shown, and wait until the icon appears before clicking.	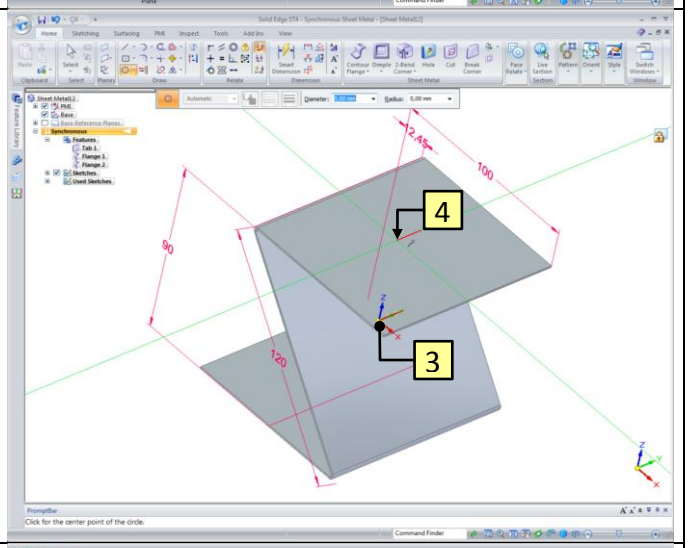
12	5. Pointed the cursor at the edge of the circle and wait until the and icons appears before clicking.	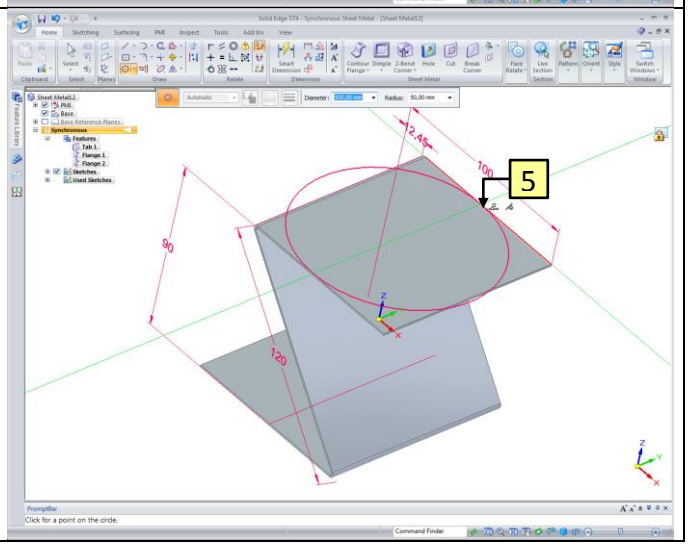

13	1. Click the **Line** button. 2. Pointed at the edge of the circle, as shown, and wait until the icon appears before clicking.	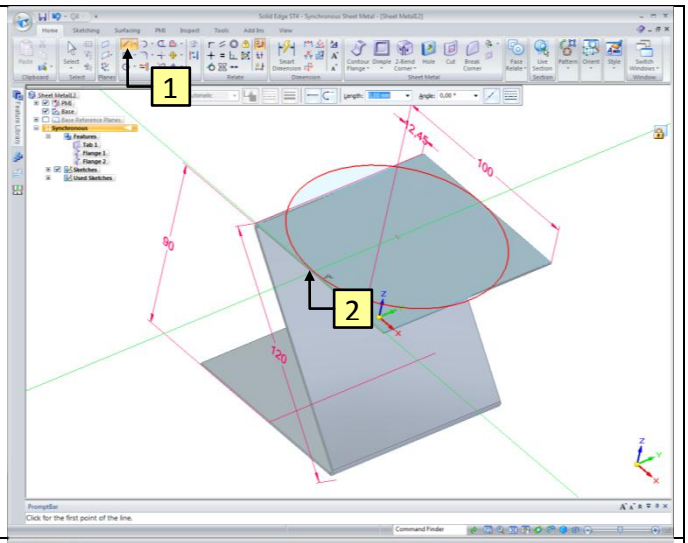
14	3. Draw the profile, as shown.	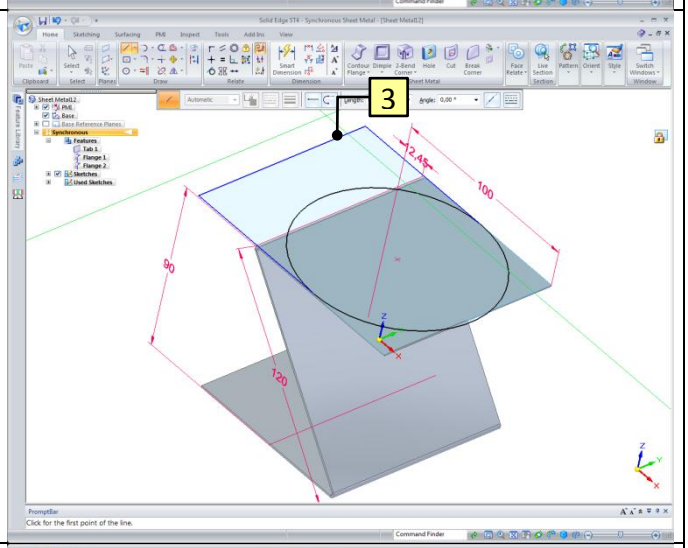
15	1. Click the **Smart Dimension** button. 2. Click on the horizontal line. 3. Click on the other horizontal line. 4. Click to place the dimension. 5. Key in the value **125** and confirm with **Enter**.	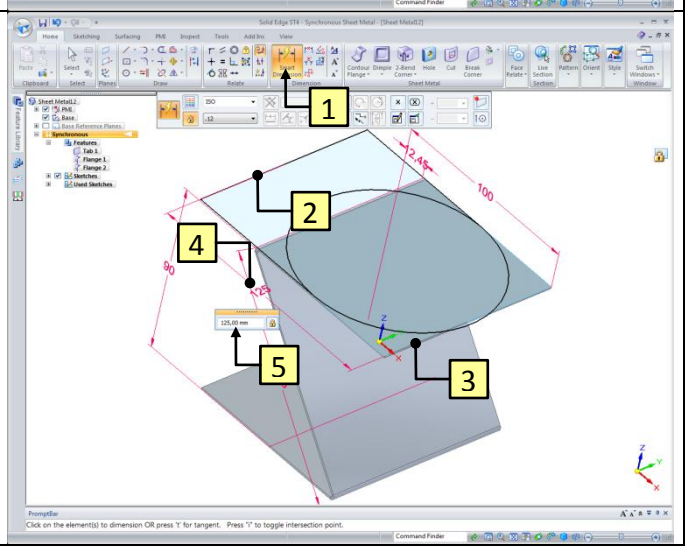

16	1. Click the **Select** button. 2. When you hover over the Region, it will turn red. Click on the Region, as shown.	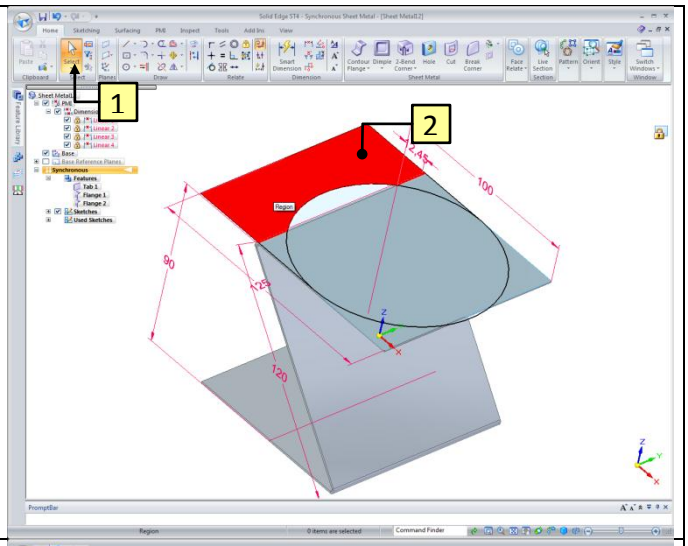
17	3. Select also the other Regions. 4. When you hover over the arrow, it will turn red. Click on the arrow, as shown.	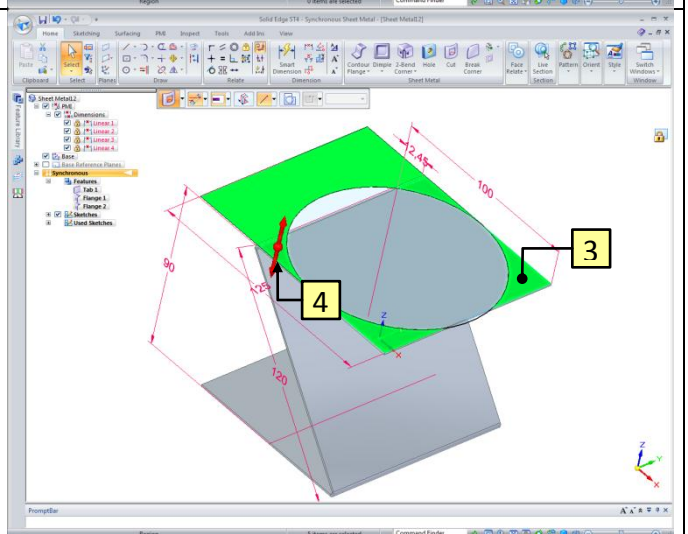
18	5. Make sure the Cut is through the material and click.	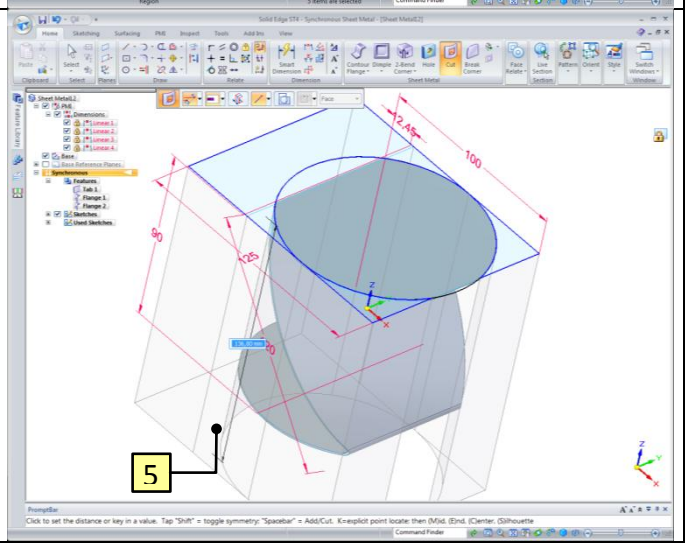

19	1. Click the **Select** button. 2. Click on the front plane, as shown. 3. When you hover over the arrow, it will turn red. Click on the arrow, as shown.	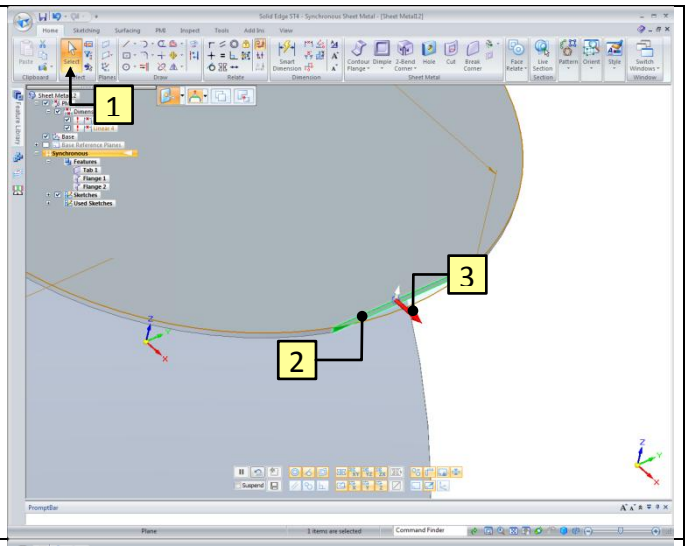
20	4. Make sure the material is added and click to confirm.	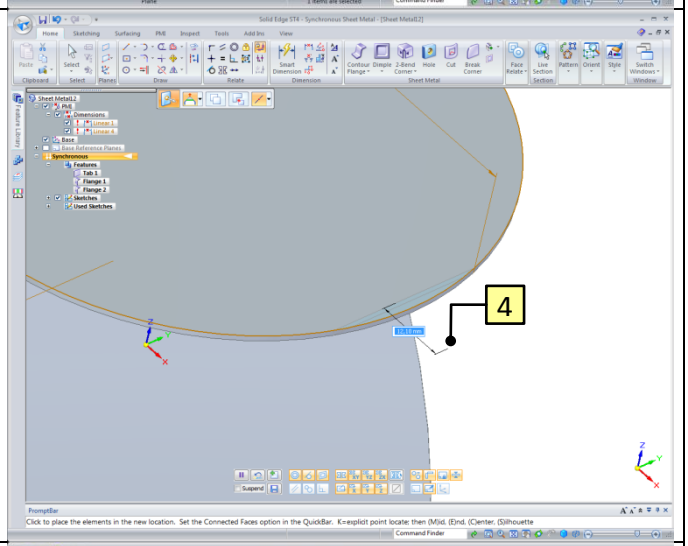
21 +	1. Click the **Circle by Center Point** button. 2. Point the cursor at the plane and wait until the lock icon appears. Click on the lock icon.	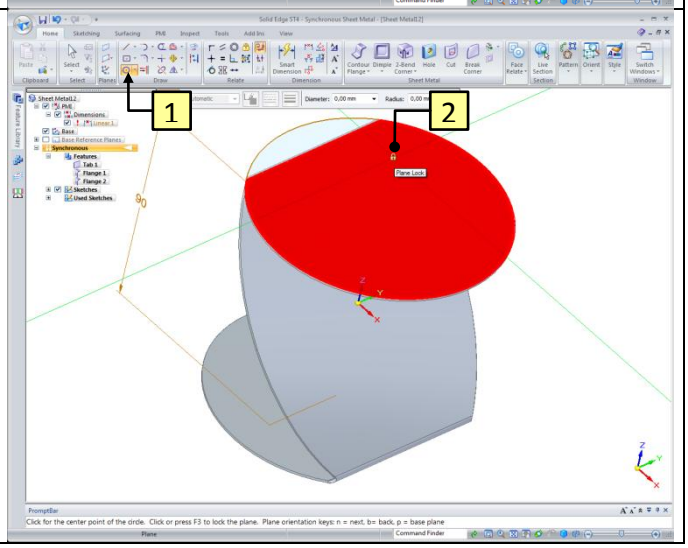

22	3. Point the cursor at the **Origin**. 4. Point the cursor at the endpoint of the projected line and wait until the icon appears before clicking.	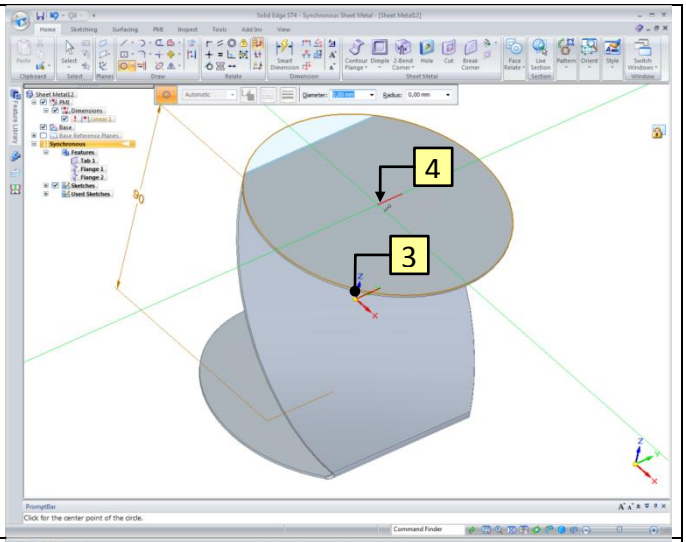
23	5. Click to place the circle.	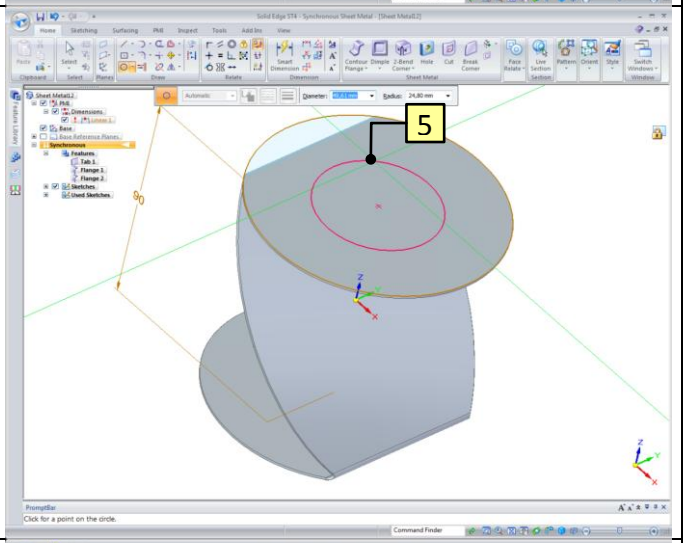
24	1. Click the **Smart Dimension** button. 2. Click on the circle. 3. Click to place the dimension. 4. Key in the value **55** and confirm with **Enter**.	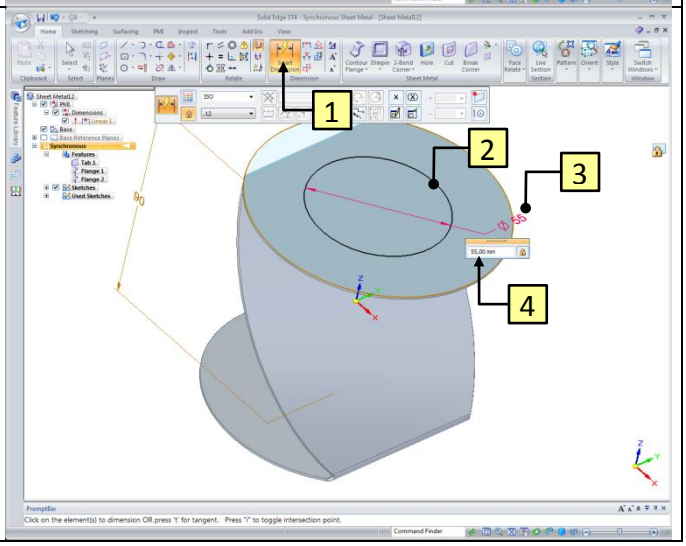

25	1. Click the **Select** button. 2. When you hover over the Region, it will turn red. Click on the Region, as shown.	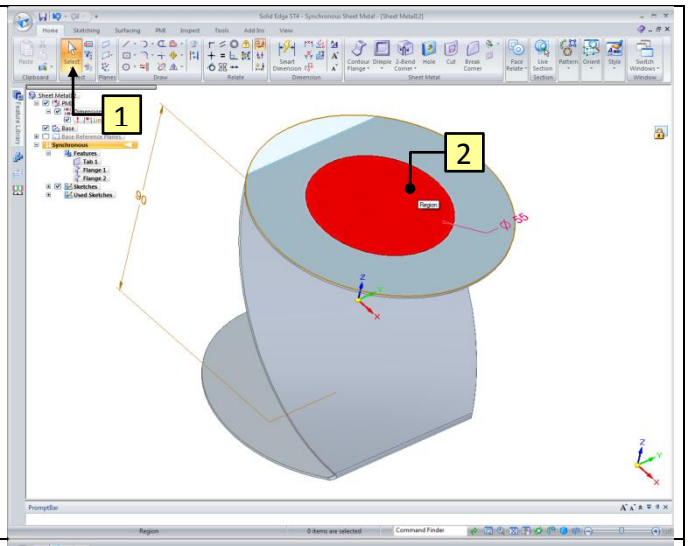
26	3. When you hover over the arrow, it will turn red. Click on the arrow, as shown.	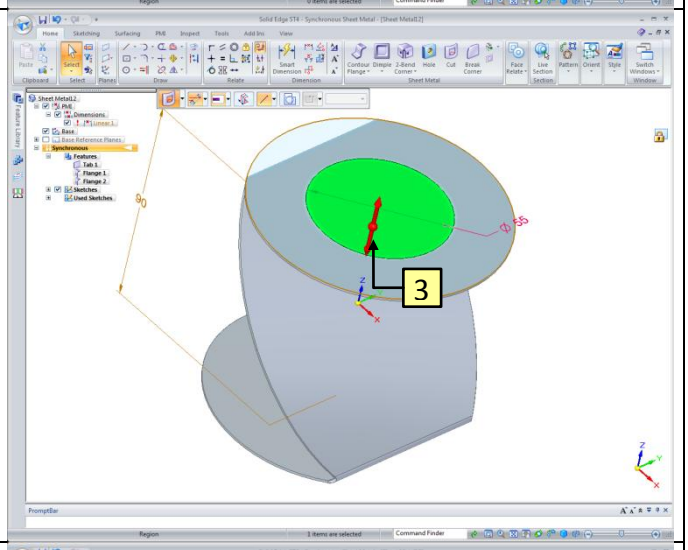
27	4. Make sure the Cut is through the first two layers and click.	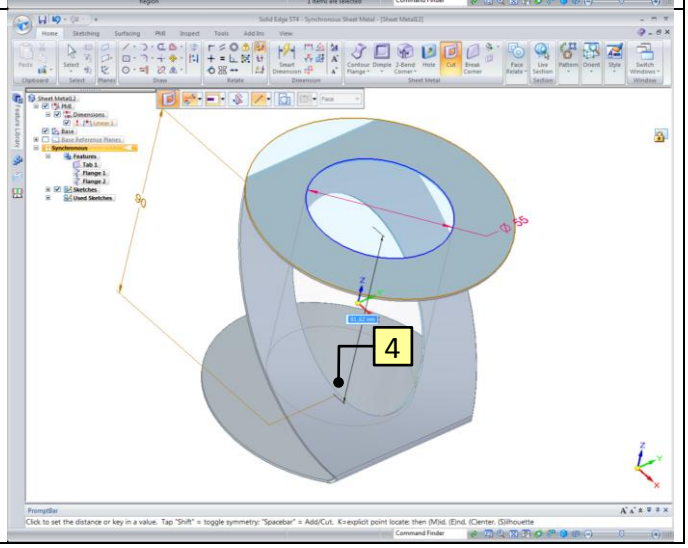

28 +	1. Click the **Circle by Center Point** button. 2. Point the cursor at the plane and wait until the lock icon appears. Click on the lock icon.	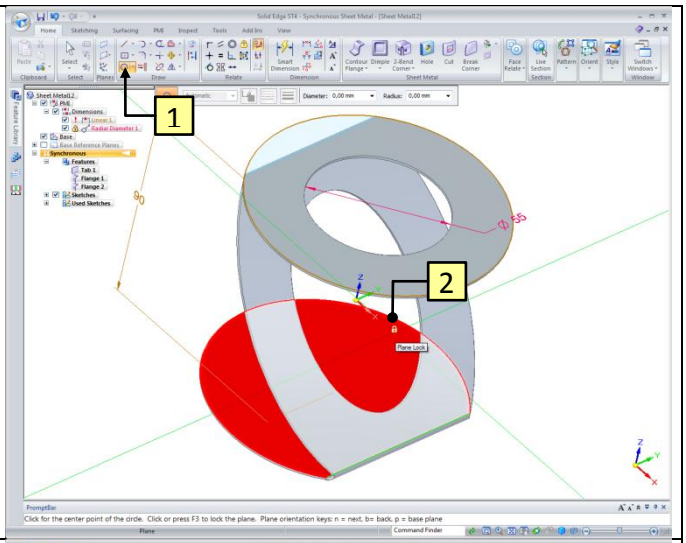
29	3. Point the cursor at the upper Cut. 4. Click on the icon.	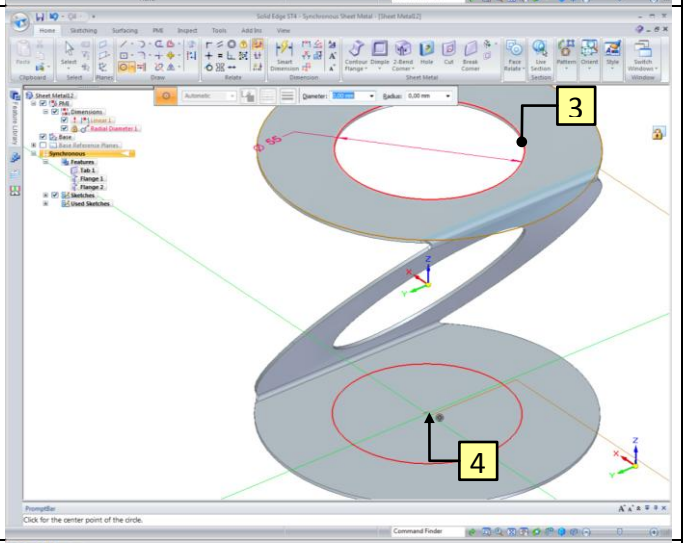
30	5. Click to place the circle, as shown.	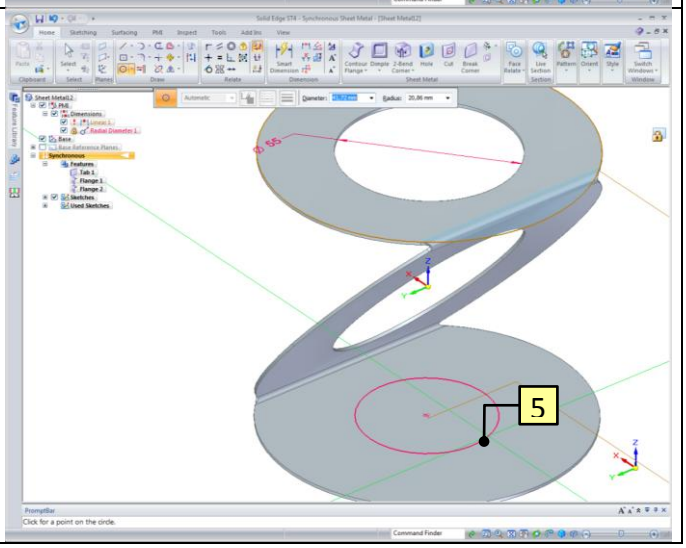

31	1. Click the **Smart Dimension** button. 2. Click on the circle. 3. Click to place the dimension. 4. Key in the value **44** and confirm with **Enter**.	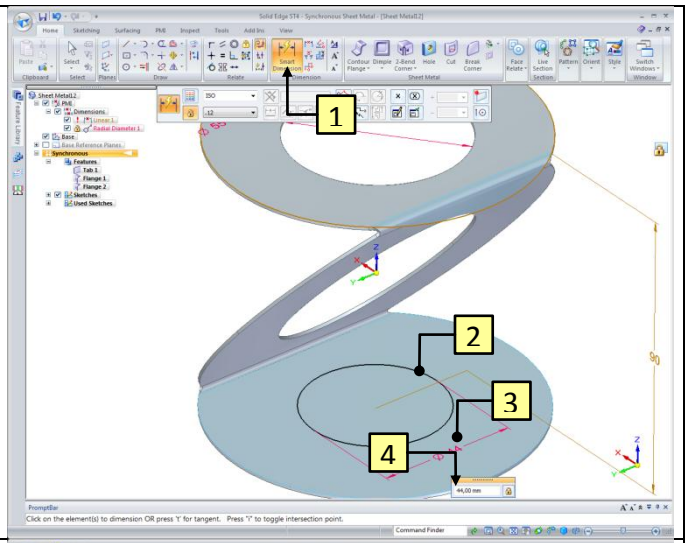
32	1. Click the **Select** button. 2. When you hover over the Region, it will turn red. Click on the Region, as shown.	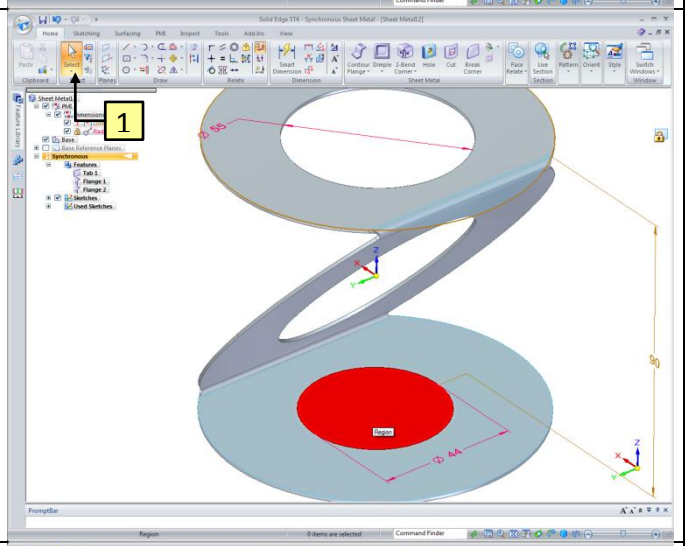
33	3. When you hover over the arrow, it will turn red. Click on the arrow, as shown.	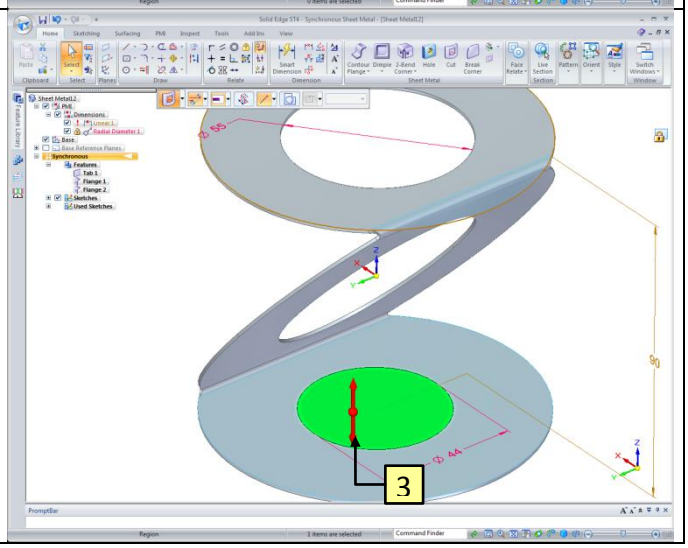

34	4. Make sure the Cut is through the material and click.	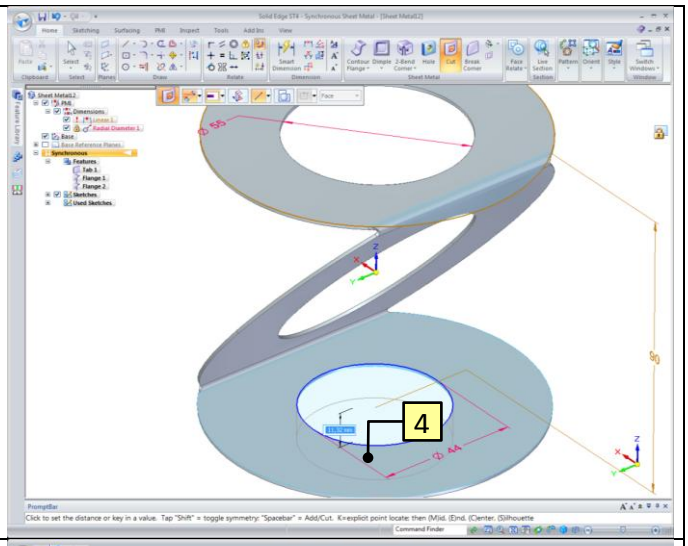
35	1. Click the **Select** button. 2. Deselect the **PMI dimensions** en **Sketches** in the PathFinder.	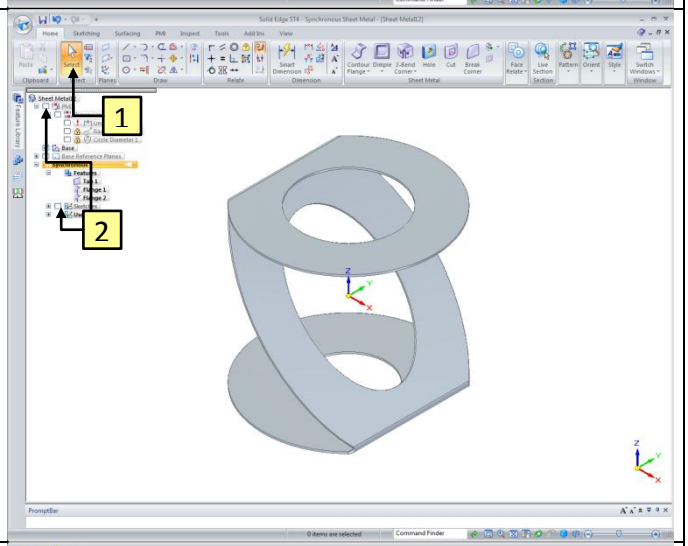
36	Now we set the material property. 1. Click the **Application Button**. 2. Click on **Properties**. 3. Click the **Material Table** button.	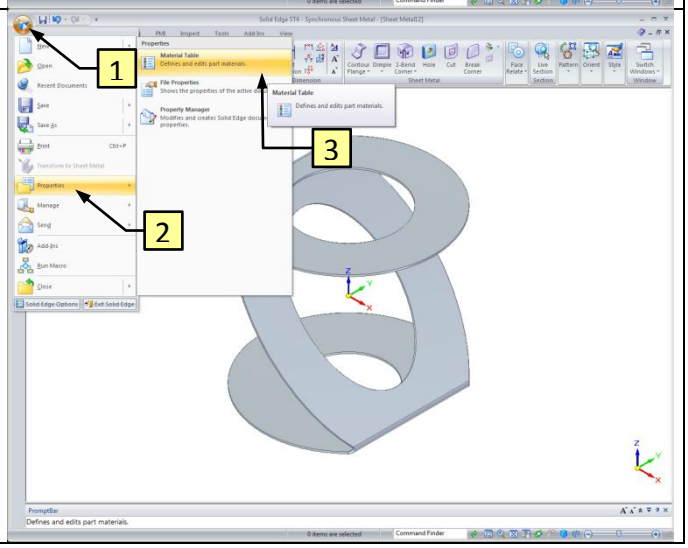

37

1. Choose the material **Steel**.
2. Click **Apply to Model** to set the material to the part.

Hint:
There are several properties which are connected to a material, like color and density. The density is necessary to determine the weight.

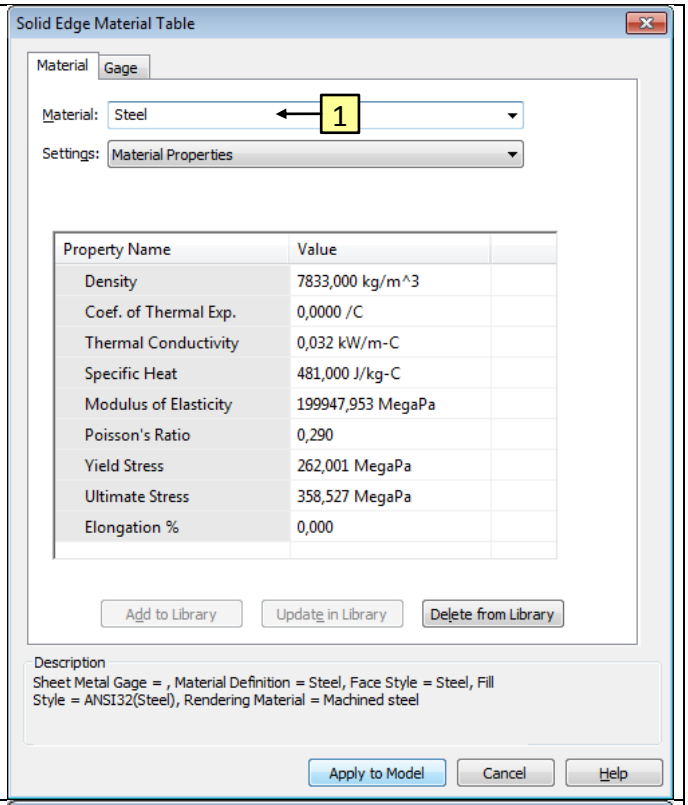

38

The part is ready. Now it must be saved.

1. First press **Ctrl + i** to turn the image to isometric view.
2. Click on the floppy icon.
3. Go to the **Summary** tab**.**
4. Fill in *Base* at Title.
5. Go to the **Project** tab and fill in the following properties:
   Document Number*: 2001*.
   Revision Number*: A*.
   Project Name: *Rocket*.
6. Click **OK** to close the screen.

Hint:
*All properties of the part are saved at the **File Properties**. These properties will used to fill in a part list.*

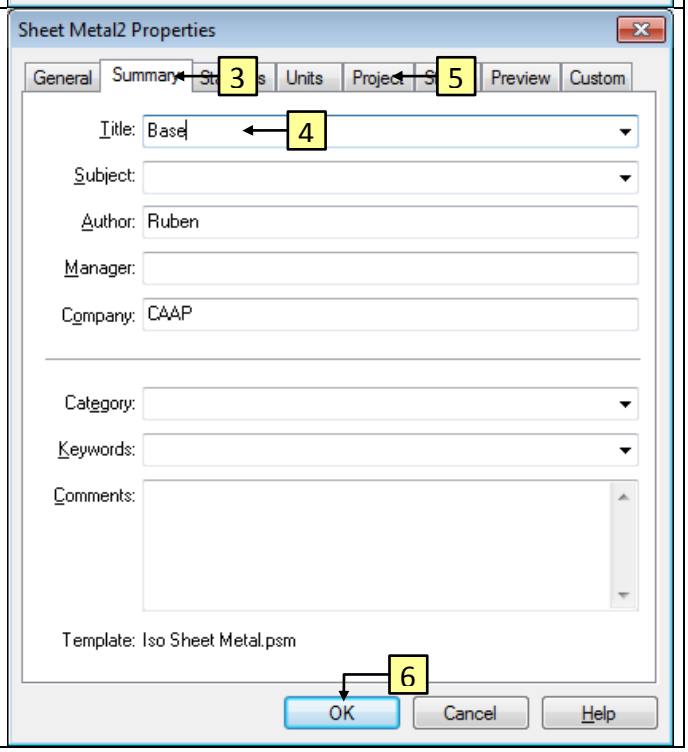
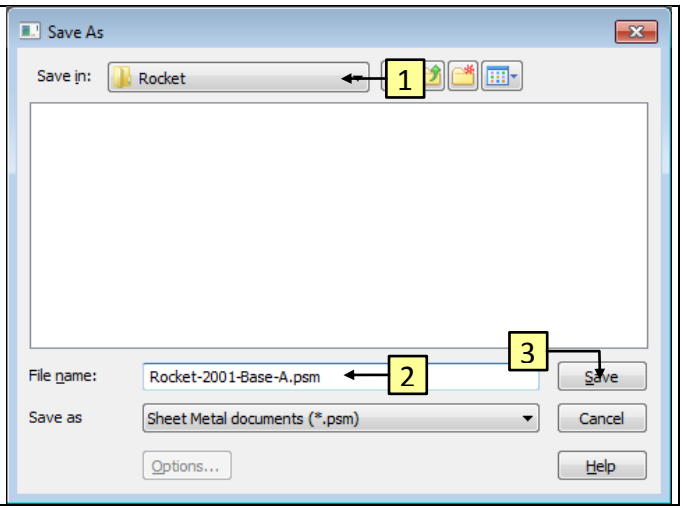
39	1. Browse to the folder *Rocket*. 2. Save the document by name *Rocket-2001-Base-A.psm*. 3. Click the **Save** button. 4. Close the file. ***Hint:*** *Save all files of one project in the same folder.*